Manualslib.com - The Global Manuals Library

Manuals / Brands / Brother Manuals / Sewing Machine / Model KH--830 / Service manual / PDF

BROTHER MODEL KH--830 SERVICE MANUAL

Quick Links

Index

Operation Sequence of Needle Selection by Punched Card

Construction and Operation

Knit-Leader KI-116

Table of Contents

Index
Operation sequence of needle selection by punched card
Construction and operation
Carriage
Stitch cam and raising cam
Cam button
Change knob
Needle selector cam
Tuck cam
Yarn feeder
Machine body
L Carriage
Plate cam
Card reader releasing cam
Separation cam
Main cam
Lace selecting lever
Needle selection mechanism
Disassembling the carriage
Assembling the carriage
Checking the carriage functions
How to adjust the carriage
Mounting dimension of guide cam A
Disassembling the bed
Disassembling the needle selector plate holder
Disassembling of the needle selector unit
Assembling the needle selector unit
Assembling the needle selector plate holder
Assembling the needle selector unit in the needle plate holder
Assembling the needle selector plate holder in the body

Inspection of needle selector functions
How to adjust the machine body
Removing the needle retaining spring
Fitting the needle retaining spring
How to adjust L carriage
Knit-leader KL-116
Combinations of knitters and knit-leaders
Ribbing attachment
Combinations of knitters and ribbers
Mounting dimensions of each part of ribbing attachment
How to adjust the colour changer
Troubleshooting
Other ManualsLib Projects

Service Manual for Knitting Machine

brother

Model KH--830
Model KR-830
Model KL-116
Model KHC-820
Model KRC-830



Downloaded from www.Manualslib.com manuals search engine

INDEX

Operation sequence of needle selection by punched card 1
Construction and operation of knitting machine 2
Machine body 4
KH–830 needle selection mechanism 6
Disassembling the carriage 7
Assembling the carriage 12
Checking the carriage functions –1– 17
Checking the carriage functions –2– 18
How to adjust the carriage 19
Disassembling the bed 21
Disassembling the needle selector plate holder 24
Disassembling the needle selector unit 26
Assembling the needle selector unit 27
Assembling the needle selector plate holder 29
Assembling the needle selector unit in the needle plate holder 30
Assembling the needle selector plate holder in the body 31
Inspection of needle selector function 34
How to adjust the machine body 35
How to adjust L carriage 47
Knit-Leader KL–116 49
Ribbing attachment KR–830 50
Combinations of knitters and ribbers 52
Mounting demensions of each part of KR–830 53
How to adjust the colour changer 54
Trouble shooting 55

Downloaded from www.Manualslib.com manuals search engine

OPERATION SEQUENCE OF NEEDLE SELECTION BY PUNCHED CARD

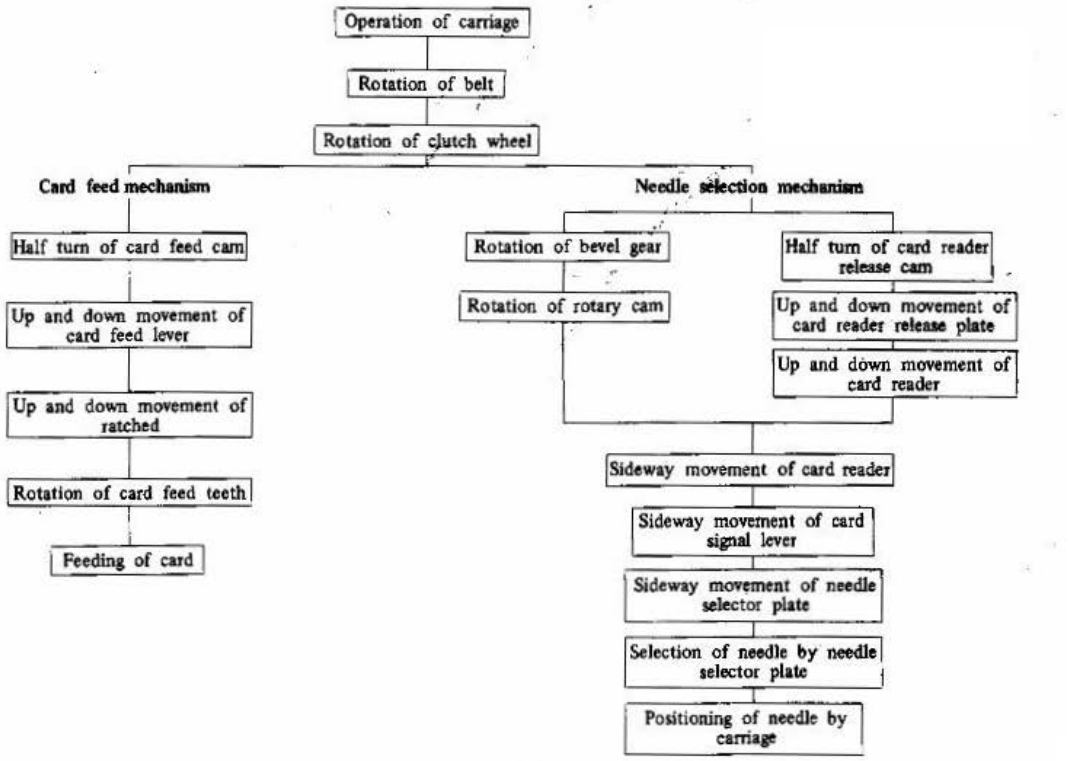

Downloaded from www.Manualslib.com manuals search engine

CONSTRUCTION AND OPERATION OF KNITTING MACHINE

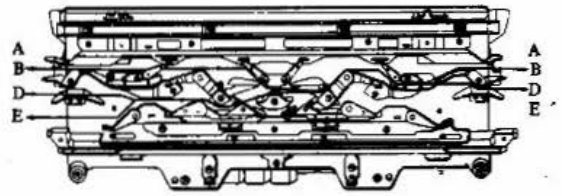

H.C.L. .... Plain B position needle Cam button ... Tuck stitches, right and left
D & E position needle ... Knitting stitch Needle selector change knob ... Pattern stitch

Tuck stitch

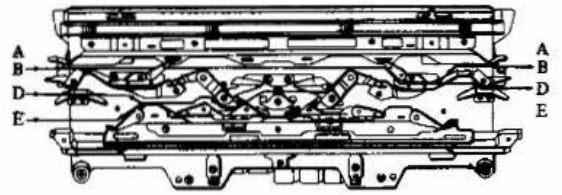

Skip stitch

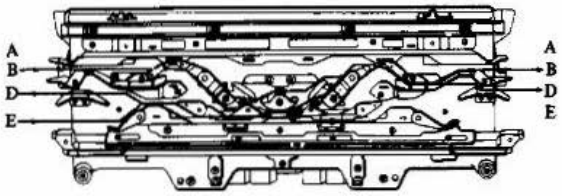

Fair-Isle

To acquire a full knowledge of operation of the knitting machine, you must understand the construction and function of each section of the machine.
A better knowledge of the operation theory enables you to locate the cause of trouble with ease if it should occur. Also you will be able to explain the detailed mechanism of the machine to your clients.

CARRIAGE

1. **Stitch cam and raising cam**
   - 1.1 Stitch cam
     The stitch cam moves the needle back and forth, thus making stiches.
   - 1.2 Raising cam
     The raising cam changes the route of the needle in the B position.
2. **Cam button**
   The cam button is used for pattern knitting. It changes the route of the needle by operating five buttons, tuck, right and left, MC, and part, right and left.
   The route of needles when each button is depressed is illustrated below:

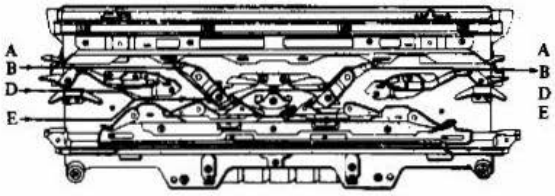

Plain stitch

Downloaded from www.Manualslib.com manuals search engine

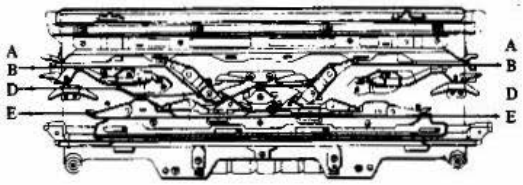

Holding cam Stitch

3. **Holding cam lever (H.C.L.)**
The holding cam lever changes the route of the needle in the E position.

4. **Tension dial**
The tension dial changes the size of stitches by changing the stitch cam position back and forth.

5. **Change knob**
The change knob has three positions, (N.L.) "Plain/Lace stitch", (KC) "Pattern stitch" and (CR) "Carriage release", and it functions as follows:
   5.1 The position of (N.L.) "Plain/Lace stitch" is used when plain or lace stitches are performed. The needle moves into an open hole in the punched card.
   5.2 The position of (KC) "Pattern stitch" is used for pattern stitch based on punched cards. The needle positioned in an open hole is selected.
   5.3 The position of (CR) is used for releasing the carriage from the needle bed.

6. **Needle selector cam**
When the change knob is set to (KC) "Pattern stitch," the needle selector cam moves down to bring the needles in B and D to the selecting cam, thus holding the needles.

7. **Tuck cam**
The tuck cam reduces the amount of upward thrust of the needle in B, and causes the needle to hook the next stitch without pulling off the latch from the first stitch in order to produce double stitches.

8. **Separation cam**
The separation cam separates the needle which is caught by the needle selecting plate coupled to the punched card and the needle (pushed upward) which is not caught by the needle selecting plate into the B and D positions, respectively.

9. **Yarn feeder**
Two types of yarn feeder are in use. The main yarn feeder guides the yarn so that the yarn is hooked onto the needle hook moved up to the stitch cam (the contrast color yarn feeder is operated by the MC stitch cam), and at the same time it protects the latch against damage.

10. **Sinker plate**
The sinker plate prevents the knitting from moving up, together with the needle raised by the cam.

11. **Weaving brush**
The weaving brush holds down the thread so that it moves to the underside of the needle in B position when the needle is lowered by the stitch cam.

Downloaded from www.Manualslib.com manuals search engine

MACHINE BODY

1. **Needle bed**
The needle bed guides the back and forth movement of the needle and determines the pitch of stitches.

2. **Combs**
The combs make sinker loops of stitches and also make the stitches even.

3. **Plain needle**
The plain needle is moved back and forth by the cam attached to the carriage in order to make needle loops.

4. **Belt**
When the carriage is moved to select the needle by the card, the belt begins to turn and drive the needle selecting mechanism and also synchronizes the carriage and needle selecting timing.

5. **Needle selector plate**
The needle selector plate is made up of eight pattern plates of the same design which are overlapped with an offset of one pitch. It causes the hook of the needle selector plate to hook the plain needle shunk when the needle selector plate corresponding to an open hole in the punched card is moved to the right.

6. **Clutch wheel**
The clutch wheel operates the needle selector mechanism and feeds the punched card by one pitch.

7. **Rotary cam**
The rotary cam is driven by the belt and pushes the card reader (corresponding to an open hole) to the left. The cam has lobes spaced at 1/24 pitch around the circumference.

8. **Card feeding cam**
The card feeding cam is driven by the rotary motion carried from the belt clutch wheel. When it is rotated ½ turn, the card feeding lever roller rolls over the cam lobe, and thus the card feed lever is made to move up and down.

9. **Card reader releasing cam**
The card reader releasing cam is rotated ½ turn by the rotary motion of the belt clutch wheel, and thus the cam lobe comes in contact with the card reader return plate roller. When the roller moves around the cam lobe, the card reader is forced down by the card reader return plate.

L CARRIAGE

1. **Plate cam**
Three types of plate cam, A, B and C, are in use for the following purposes:
Plate cam B .... Raises the plain needle selected for B position higher than the comb.
Plate cam A .... Keeps the plain needle held upward so that the needles in B position are correctly moved by the feed hook into the stitch formed by the intersecting plain needles.
Plate cam C .... Removes the intersecting plain needle when the stitch has moves to the next needle.

2. **Feed hook**
The feed hook carries the plain needle, which is raised by the plate cam, to the next plain needle.

3. **Leaf spring**
The leaf spring keeps the needle latch open and helps the plain

Downloaded from www.Manualslib.com manuals search engine

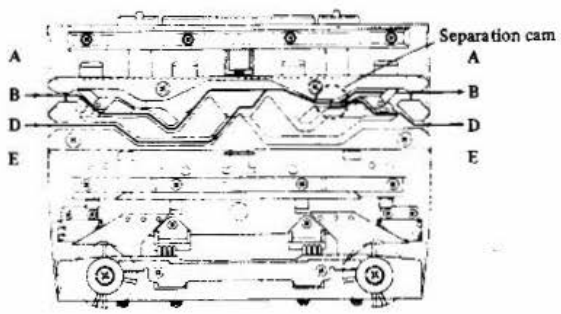

needle stitch (which intersects with the feed hook) to move the next plain needle.

4. **Main cam**
The main cam moves and selects the plain needle when it changes stitches.

5. **Separation cam**
As in the case of the separation cam on the K carriage, the separation cam guides the knitting needle, which is held down by the main cam, to B or D position.
Needles in B position .... When the needles carried by the feed hooks from D position intersect with each other, the stitch is moved up just before the combs by the main cam. The feed hook holds this stitch, and separate the needles into B and D position.
Needles in D position .... While staying in D position, the needle is caused to intersect with the needle in B position by the feed hook, and then the needle is raised by the main cam until the needle latch passes the stitch. After the needles intersect with plate cam C, they are separated into B and D positions by the main cam and separation cam.

6. **Lace selecting lever**
The lace selecting lever has two positions "N" and "F", and it functions as follows:
6.1 The position of N is normal lace position.
6.2 The position of F is used for knitting the fine lace.

Downloaded from www.Manualslib.com manuals search engine

KH–830 NEEDLE SELECTION MECHANISM

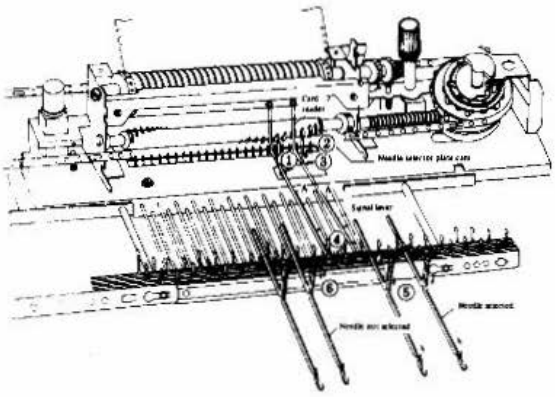

Fig. A

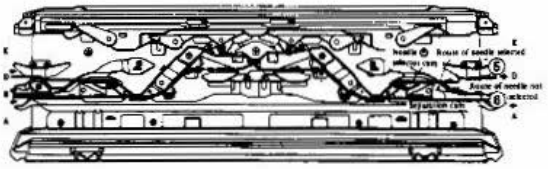

Fig. B

* In the KH–830 needle selection mechanism, when the needle is moved downward by the needle selector cam attached to the carriage, the card reader in the position of open hole in the punched card moves up. When the card reader moves up, the card reader is forced to the left by the rotary cam, thus causing the **card signal lever** (which is coupled to the card reader) to move. Thus, the **card signal lever** causes the needle selector plate to the right, and the needle shunk is caught by the **hook** of the needle selector plate. This keeps the needle forced down, and the needle is led to the D position by the separation cam.
  On the needle which is not positioned in an open hole, the card reader does not move up, and as a result, the needle cannot be held down (in other words, it returns to the home position even if held down), it is pushed back to the B position by the separation cam attached to the carriage.

Main body

1) If there is an open hole, the card reader is moved up by the spring.
2) The card reader is moved to the left by the needle selector cam.
3) The signal lever is moved to the left by the card reader.
4) The signal lever pivots upon A (see Fig. A), and the needle selector plate moves to the right.
5) The needle selector plate in this position is moved to the right until it catches the needle shunk, thus keeping the needle forced down.
6) When there is no hole, the needle selector plate does not move, and as a result, the needle returns to the home position from where it is held down.

Carriage

Since the needle positioned in an open hole is under the needle selector plate, it is carried to the D position through the separation cam.

The needle which is not positioned in an open hole is immediately forced back to the home position from the position where it is held, it operates at A (see Fig. B) and forced back to B.

Downloaded from www.Manualslib.com manuals search engine

DISASSEMBLING THE CARRIAGE

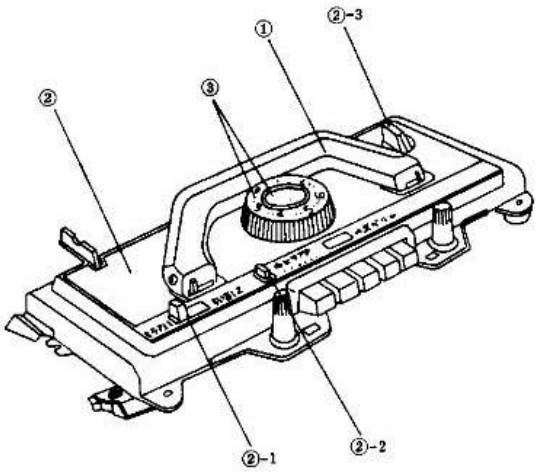

Fig. 1

Name of parts	
①	Handle
②	Carriage cover
②-1	H.C.L. knob
②-2	Plain lever knob
②-3	Change knob
③	Stitch dial cap

1. Removing the carriage handle
   1.1 Keep the handle down and remove the two right and left handle screws. Then the handle can be taken off the carriage.

2. Removing the carriage cover
   2.1 Loosen, from the back of the carriage, and remove the two right and left carriage cover clamp screws.
   2.2 Pull off the carriage cover upward. Then the H.C.L. knob, the plain lever knob and the change knob will come off.
   2.3 Pull off upward the H.C.L. knob spring mounted under the H.C.L. knob.

3. Removing the stitch dial
   3.1 Pull off the stitch dial cap upward.
   3.2 Remove the fastening screw and pull off the stitch dial upward.

Downloaded from www.Manualslib.com manuals search engine

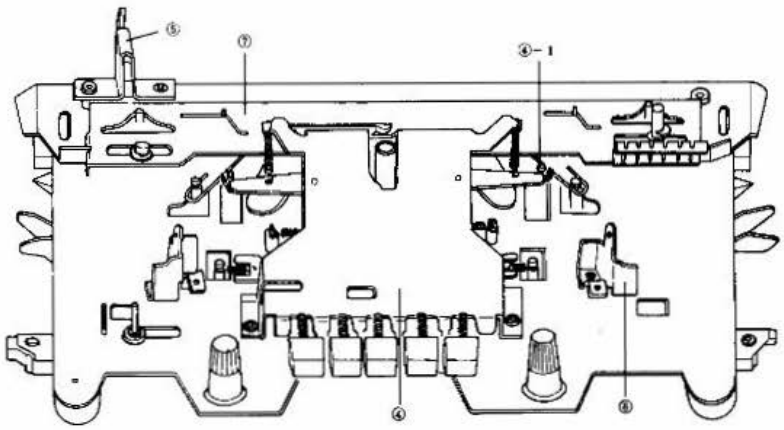

Fig. 2

Name of parts	
④	Cam button unit
④-1	Raising cam change spring
⑤	Row counter tripper
⑥	Handle setting base
⑦	Upper slide plate

4. Removing the cam button unit
   - 4.1 Remove the raising cam change spring by means of a work hook used from the side of the raising cam calking pin.
   - 4.2 Remove the two cam button unit clamp screws.
   - 4.3 Remove the cam button unit by lifting it while pulling it toward you.
5. Removing the row counter tripper
   - 5.1 Remove the right row counter tripper clamp screw and the left nut using a box driver, then pull off the tripper upward.
   - 5.2 Take care not to lose the collars placed beneath the row counter tripper.
6. Removing the handle setting base
   - 6.1 Remove the two right and left clamp screws and then the leaf spring.
   - 6.2 Remove the four right and left clamp screws.
7. Removing the upper slide plate
   - 7.1 Remove the snap rings from the change knob shaft and left side shaft using a ⊖ screw driver.
   - 7.2 Remove the upper slide plate by lifting its right and left ends at the same time.

Downloaded from www.Manualslib.com manuals search engine

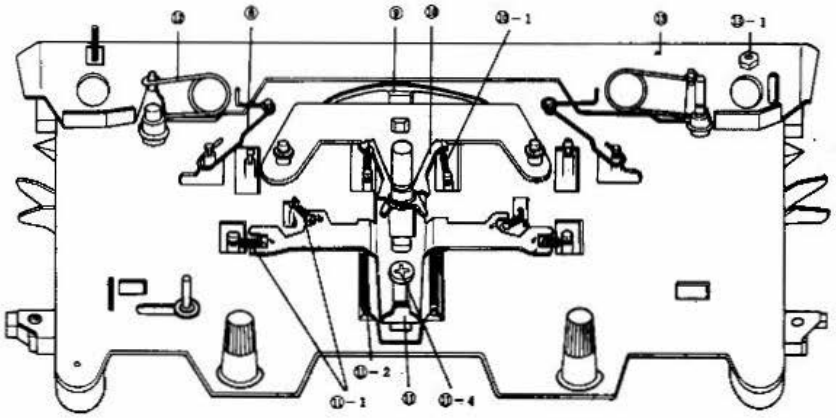

Fig. 3

Name of parts	
⑧	Needle selection change spring
⑨	Stitch cam guide plate spring
⑩	Tuck cam operating plate
⑩-1	Tuck cam spring
⑪	Change plate
⑪-1	MC cam spring
⑪-2	Change plate spring
⑪-4	Change plate guide stud
⑫	Connecting plate spring
⑬	Rear plate
⑬-1	Clamp nut

8. Removing the needle selection change spring
   8.1 Remove the right and left needle selection change spring.
9. Removing the stitch cam guide plate spring
   9.1 Remove the stitch cam guide plate spring by pressing this center toward the stitch cam guide plate.
10. Removing the tuck cam operating plate in left and right
   10.1 2 springs of tuck cam operating plate will be removed at the place of calking.
   10.2 Lift and pull off the presser ring and the tuck cam operating plate.
11. Removing the change plate
   11.1 Remove the four right and left MC cam springs from the MC cam.
   11.2 Remove the right and left ends of the change plate spring from the change plate.
   11.3 Remove the nuts from the change plate clamp screws using a box driver from the back of the carriage.
   11.4 Remove the change plate clamp screw(s) with a driver. Lift and pull off the plate.
12. Removing the connecting plate spring
   12.1 Lift and pull off the two springs on the left and right.
13. Removing the carriage rear plate
   13.1 Remove the rear plate clamp nut, and the rear plate will come off.

Downloaded from www.Manualslib.com manuals search engine

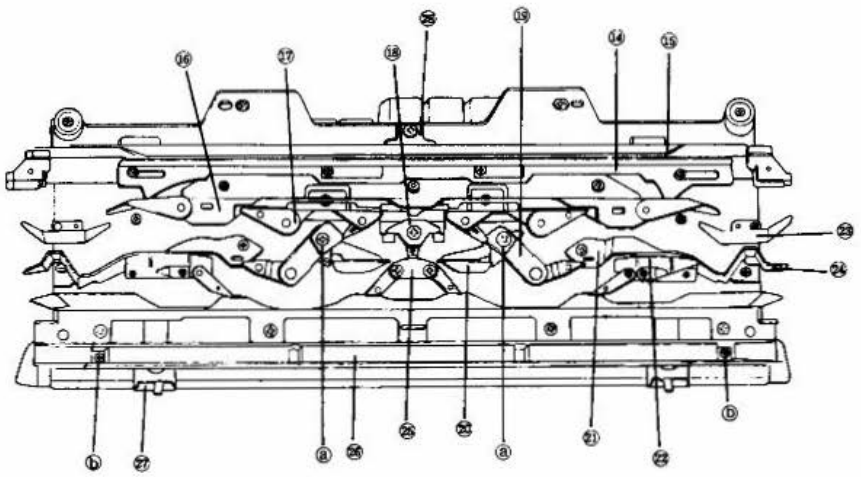

Caution:

The sub stitch cam clamp screws (a) and the carriage rear leg screws (b) are fastened with nuts on the outer side of the carriage. Remove the screws after removing the nuts.

Fig. 4

Name of parts
⑭ Front slide plate
⑮ Carriage front leg
⑯ Guide cam A assembly
⑰ Guide cam B
⑱ Guide cam C
⑲ Stitch cam
⑳ MC cam
㉑ Guide cam D
㉒ Needle selecting cam
㉓ Guide cam F
㉔ Separation cam
㉕ Tuck cam
㉖ Carriage rear leg
㉗ Connecting plate
㉘ Stripe adjuster plate

Downloaded from www.Manualslib.com manuals search engine

14. Removing the front slide plate
    14.1 Remove snap ring 3 and washers put on the H.C.L. knob shaft on the outer side of the carriage.
    14.2 Remove the two front slide plate set-screws. Then lift and pull off the front slide plate. (When pulling off the plate, keep the H.C.L. knob at position H.)
15. Removing the carriage front leg
    15.1 Remove the two carriage front leg clamp screws and then the leg itself.
16. Removing guide cam A
    16.1 Remove the two right and left guide cam A clamp screws and then the cam itself. (Slide cam as well)
17. Removing guide cam B
    17.1 Remove the left guide cam B clamp screw and then the left section of the cam.
    17.2 Remove the right section in the same manner.
18. Removing guide cam C
    18.1 Remove the guide cam C clamp screw, and guide cam C, valve cam C, the valve cam C spring, guide cam C shaft, slide cam guide and clamp screw will come off.
19. Removing the stitch cam
    19.1 Remove snap ring and washer from the stitch cam shaft on the outer side of the carriage.
    19.2 Remove the nut from the sub stitch cam using a box driver from the outer side of the carriage. (See Fig. 4)
    19.3 Remove the left stitch cam clamp screw, and the left part of valve cam D, the left part of the valve cam D spring, the sub stitch cam shaft (collar), the left part of the MC cam and the clamp screw will come off.
    19.4 Remove the right part of the stitch cam in a similar way.
20. Removing the stitch cam plate
    20.1 Remove the snap ring 7 and washer from the stitch cam plate shaft, and the cam plate will come off. (See Fig. 4.)
21. Removing guide cam D
    21.1 Remove the left guide cam D clamp screw, and guide cam D, the guide cam D shaft and the clamp screw will come off.
    21.2 Remove the right part of guide cam D in a similar way.
22. Removing the needle selecting cam
    22.1 Remove the two left needle selecting cam clamp screws, and the left part of the needle selecting cam will come off.
    22.2 Remove the right part of the needle selecting cam in a similar way.
23. Removing guide cam F
    23.1 Remove the right and left guide cam F clamp screws, and the right and left parts of guide cam F will come off.
24. Removing the separation cam
    24.1 Remove the right and left separation cam clamp screws and then the cam itself.
25. Removing the tuck cam
    25.1 Remove the right and left tuck cam clamp screws, and the tuck cam plate, the right and left parts of the tuck cam, the tuck cam spring, the tuck cam shafts and the clamp screws will come off.
26. Removing the carriage rear leg.
    26.1 Remove the six carriage rear leg clamp screws, and the leg will come off.
27. Removing the connecting plate
    27.1 Pull off the connecting plate by lifting it by its right and left parts near the front leg.
28. Removing the stripe adjuster
    28.1 Remove the stripe adjuster plate clamp screw and then the plate itself.

Downloaded from www.Manualslib.com manuals search engine

ASSEMBLING THE CARRIAGE

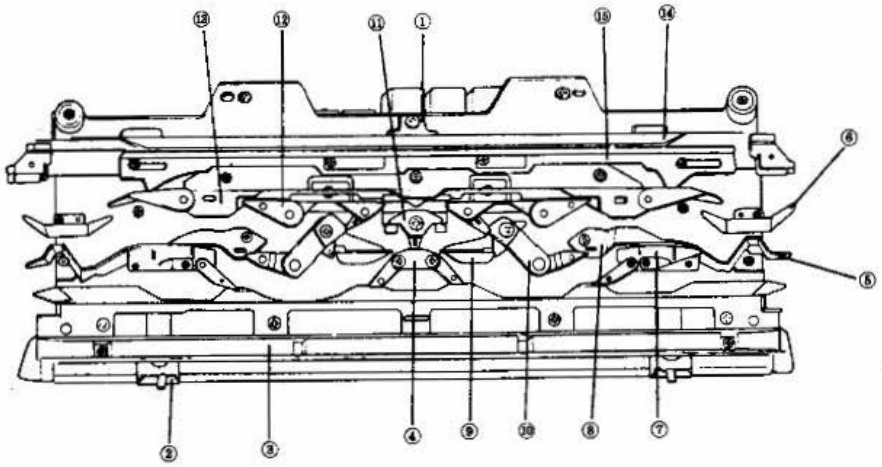

Fig. 5

Name of parts
① Stripe adjuster plate
② Connecting plate
③ Carriage rear leg
④ Tuck cam
⑤ Separation cam
⑥ Guide cam F
⑦ Needle selecting cam
⑧ Guide cam D
⑨ MC cam
⑩ Stitch cam
⑪ Guide cam C
⑫ Guide cam B
⑬ Guide cam A assembly
⑭ Carriage front leg
⑮ Front slide plate

12. Mounting guide cam B
    Fit the valve cam B spring onto the valve cam B shaft and put guide cam B in position B and clamp with a screw while keeping valve cam B at the ring part of the valve cam B spring.
    Note: Turn valve cam B inside the sub stitch cam.
13. Mounting guide cam A
    Mount guide cam A and slide cam clamp with right and left screws.
14. Mounting the carriage front leg
    Tighten the two screws provided near the center of the carriage front leg.
15. Mounting the front slide plate
    15.1 Put the front slide plate on the carriage front leg and clamp with set-screws. (The longer screw is used for left side.)
    Note: See to it that the slide plate will work easily and that the holding cam will go down when the slide plate is moved to the H (Holding) position.
    15.2 Fix the holding cam lever shaft with a washer and snap ring 3 from the outer side of the carriage. (See Fig. 6)

Downloaded from www.Manualslib.com manuals search engine

1. Mounting the stripe adjuster plate
   Mount the stripe adjuster plate and clamp provisionally.
2. Mounting the connecting plate
   Fit the right and left parts of the connecting plate into the carriage plate. (Take care not to mistake the right part for the left part or vice versa.)
3. Mounting the carriage rear leg
   Put the carriage rear leg into position and clamp with screws.
4. Mounting the tuck cam
   Fit right and left clamp screws into the tuck cam plate, mount the right and left parts of the tuck cam, the tuck cam collar and the tuck cam spring on the screws, and clamp. (Be careful of the direction of the tuck cam spring.)
   Note: Keep the tuck cam open sideways. It should return easily under spring pressure.
5. Mounting the separation cam
   5.1 Put the left part of the separation cam on the left end of the carriage. Then clamp the separation cam clamp screw into the outer screw hole.
   5.2 Fit the right part of the separation cam in a similar way.
6. Mounting guide cam F
   6.1 Mount the left part of guide cam F and clamp.
   6.2 Mount the right part of guide cam F in a similar way.
7. Mounting the needle selecting cam
   7.1 Fit the left part of the needle selecting cam and clamp with a screw.
   7.2 Mount the right part of the needle selecting cam in a similar way.
8. Mounting guide cam D
   8.1 Combine the right and left parts of guide cam D and the guide cam D shaft (collar) and clamp with screws.
9. Mounting the stitch cam guide plate
   9.1 Mount the stitch cam guide plate from the outer side of the carriage. Put washers on the right and left parts of the stitch cam shaft bearing from the back side of the carriage and stop with snap ring 7.
10. Mounting the stitch cam
   10.1 Fit the left part of the MC cam, the sub stitch cam shaft (collar), the left part of the valve cam D spring, the left part of valve cam D and the left part of the sub stitch cam into the carriage plate in this order and clamp with a screw. Fix with a nut from the outer side of the carriage. (The ring part of the valve cam D spring should be hung from valve cam D and the hook part from the left part of the sub stitch cam.)
   10.2 Mount the right part of the stitch cam in a similar way.
   10.3 Clamp the stitch cam shaft with a washer and snap ring 3 on the outer side of the carriage.
   Note: 1. The MC cam, valve cam D and the stitch cam should work easily.
   2. Valve cam D should return under spring pressure.
11. Mounting guide cam C
   Build valve cam C, the valve cam C spring, the guide cam C shaft (collar) and the slide cam guide into guide cam C and mount guide cam C on the carriage.
   (The ring part of the valve cam C should be hung from valve cam C and the hook part from the right-hand notch of guide cam C.)
   Note: The valve cam C should work easily. Valve cam C should return to the center under spring pressure.

Downloaded from www.Manualslib.com manuals search engine

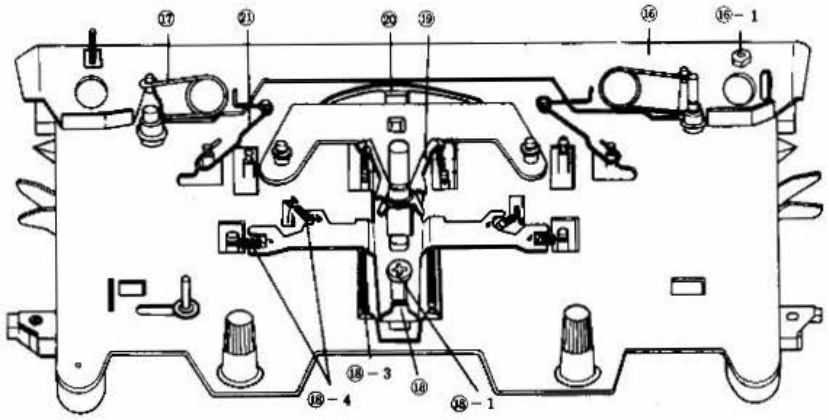

Fig. 6

Name of parts	
⑯	Rear plate
⑯-1	Nut
⑰	Connecting plate spring
⑱	Change plate
⑱-1	Change plate guide stud
⑱-3	Change plate pulling spring
⑱-4	MC cam spring
⑲	Tuck cam operating plate
⑳	Stitch cam guide plate spring
㉑	Needle selector spring

16. Mounting the carriage back plate
    16.1 Mount the back plate on the carriage, put a nut on the back plate clamp screw and clamp.
    Note: See to it that the back plate will work easily.
17. Mounting the connecting plate spring
    Put the right and left parts of the connecting plate spring on the connecting plate calking pin and the change knob shaft.
18. Mounting the change plate
    18.1 Mount the change plate with the change plate guide stud.
    18.2 Tighten the clamp screw with a nut from the back side of the carriage.
    18.3 Hook the change plate pulling spring to the right and left parts of the change plate.
    18.4 Hook four points of the MC cam spring to the right and left parts of the MC cam and the right and left parts of the MC knitting change cam.
    Note: The change plate, the right and left parts of the MC cam and the right and left parts of the MC knitting change cam should return under spring pressure after being pressed. The change plate should operate easily.
19. Mounting the tuck cam operating plate
    19.1 Put the right part of the tuck cam operating plate on the tension dial shaft and place on it the left part of the tuck cam operating plate and the collar.
    19.2 Hook the right and left ends of the tuck cam operating plate spring to the tuck cam calking pin.
20. Mounting the stitch cam guide plate spring
    Mount the stitch cam guide plate spring.
21. Mounting the needle selector spring
    21.1 Put the needle selector spring, hook its right and left parts to the needle selector cam calking pins.

Downloaded from www.Manualslib.com manuals search engine

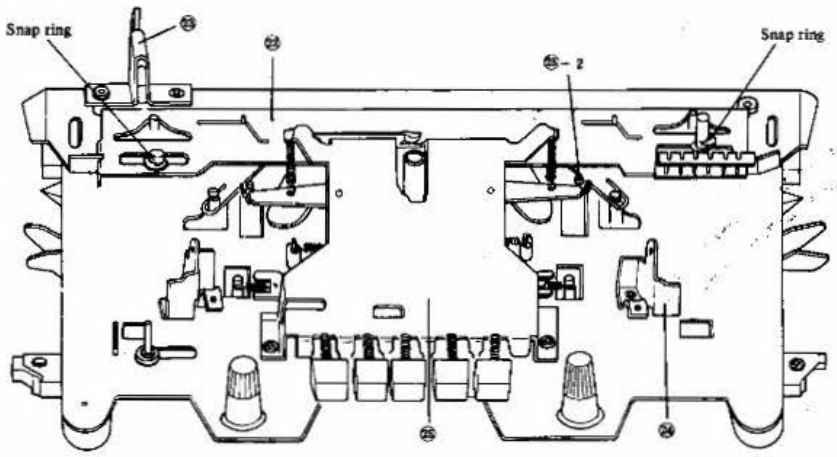

Fig. 7

Name of Parts	
㉒	Upper slide plate
㉓	Row counter tripper
㉔	Handle base
㉕	Cam button unit
㉕-2	Raising cam change spring

22. Mounting the upper slide plate
    22.1 Mount the upper slide plate, inserting the connecting plate pin into the hole at the back and inserting the needle selector spring in the guide groove on the plate.
    22.2 Fix the upper slide plate to the change knob shaft on the right of the upper slide plate with two snap rings and left side with one snap ring.
23. Mounting the row counter tripper
    23.1 Put a step collar on the left screw of upper slide plate, place a collar on the right screw hall. Then put the row counter tripper on them, and clamp with nut on the left side and screw on the right side.
24. Mounting the handle base
    24.1 Clamp the right and left parts of the handle base with four clamp screws.
    24.2 Clamp the right and left parts of the handle lock spring with screws.
25. Mounting the cam button unit
    25.1 Mount the cam button unit on the tension dial shaft and clamp with screws at right and left.
    25.2 Hook the raising cam change spring to the raising cam calking pin.

Note: The cam should be switched accurately when the right or left of the TUCK, the right or left of the PART or MC button is pressed.

Downloaded from www.Manualslib.com manuals search engine

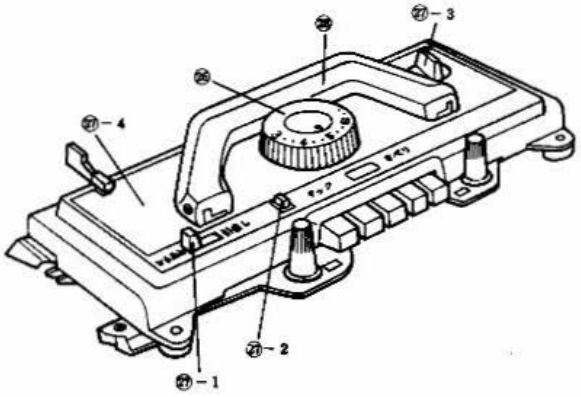

Fig. 8

Name of parts	
㉖	Stitch dial; stitch dial presser cap
㉗-1	Holding cam lever
㉗-2	Plain lever knob
㉗-3	Change knob
㉗-4	Carriage cover
㉘	Handle

26. Mounting the stitch dial

26.1 Fit the stitch dial on the shaft and clamp with a screw in such a manner that the notch in the stitch dial presser cap comes in front.

26.2 Bring the mark of the stitch dial presser cap to the notch in the knob retainer and put the cap in position.

Note: The mark should come right above the number on the stitch dial.

27. Mounting the carriage cover

27.1 Put the holding cam lever spring on the holding cam lever shaft and mount the holding cam lever.

27.2 Put the plain lever knob on the cam button unit.

27.3 Put the change knob on the knob shaft.
(Be careful of its position.)

27.4 Mount the carriage cover and clamp with a screw from the back of the carriage.

28. Mounting the handle

Clamp the handle pin while keeping the handle horizontal.

Downloaded from www.Manualslib.com manuals search engine

CHECKING THE CARRIAGE FUNCTIONS –1–	
1. Change knob function	1.1 When the change knob is switched to each position, it should move smoothly; the right or left part of the connecting plate and the needle selection switching cam should work without fail.
2. MC cam operating	2.1 When the end of the right or left part of the MC cam is pressed fully down and then quietly lifted with your finger while keeping the MC button depressed all the time, the right and left parts of the MC cam should return to their original position under spring pressure.
3. MC knitting change cam operation	3.1 The right and left parts of the MC cam should shift without fail while the MC button is kept depressed.
4. Raising cam operation	4.1 When the end of the right or left part of the raising cam is lifted fully with the stitch dial at the 0, 5, or 10 position and quietly lowered with your finger, the right or left part of the raising cam should return to its original position without fail under spring pressure.
5. Needle selection cam operation	5.1 When the needle selection cam is set at "KC", and when the end of the right or left part of the needle selection cam is fully lifted and then quietly lowered with your finger, the cam should return to its original position without fail under spring pressure.
6. Tuck cam operation	6.1 When the right or left part of the cam button is depressed, and when the end of the right or left part of the cam is fully lifted and then quietly lowered with your finger, the right or left part of the tuck cam should return to its original position without fail under spring pressure. 6.2 When the cam button is set at plain, and when the end of the right or left part of the tuck cam should return to its original position without fail under spring pressure.
7. Cam button unit function	7.1 When the cam button is shifted to "TUCK right and left," "MC", or "PART right and left," the button should move smoothly and the tuck cam, the MC cam and the raising cam should shift their places without fail.
8. Holding cam lever function	8.1 When the holding cam lever is shifted to "H" or "N", it should move smoothly and the holding cam should make accurate operation without fail.
9. Plain knitting lever function	9.1 When the plain knitting lever is thrown rightward while pressing "TUCK right and left," "MC" or "PART right and left" buttons, the lever should move smoothly and the cam button should return to its original position without fail.

Downloaded from www.Manualslib.com manuals search engine

CHECKING THE CARRIAGE FUNCTIONS –2–

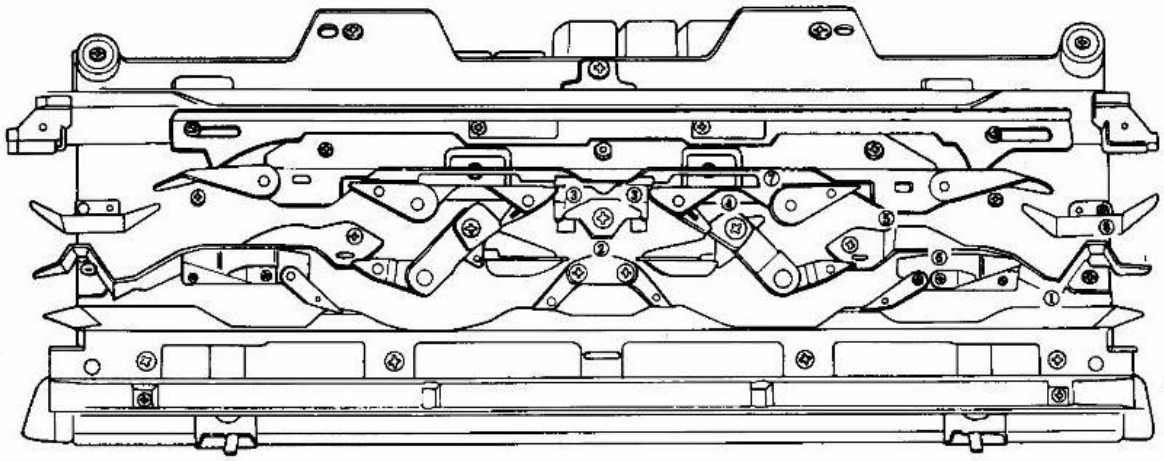

Fig. 9

Make sure that the needle butt passes smoothly through the following:

(1) Between the sub raising cam and the separating cam.

(2) Between the tuck cam plate and guide cam C.

(3) Between guide cam C and slide cam.

(4) Between the sub raising cam and guide cam B.

(5) Between guide cams A and D.

(6) Between guide cam D and the needle selecting cam.

(7) Between guide cams A and B.

(8) Between guide cam F and the separating cam.

Downloaded from www.Manualslib.com manuals search engine

The fabric floats (stitch float).

HOW TO ADJUST THE CARRIAGE

Cause	Adjustment
1. The sinker plate is in touch with comb teeth. There is too much gap between the sinker plate and the comb teeth.	**Position adjustment of the sinker plate** 1. For KH–830, it is not necessary to adjust the position of sinker plate because there are two bosses on the carriage plate to get proper position. (The sinker plate stoppers are discontinued for this model.) 2. Mounting dimensions of sinker plate The sinker plate should be 118.5m/m apart from the carriage rear leg. If it is not correct, loose screws and adjust.
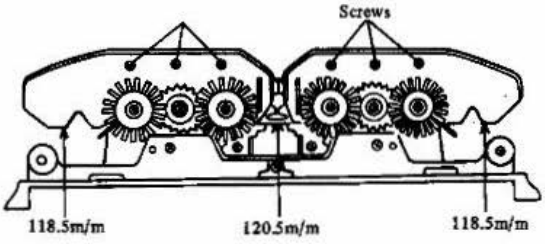 Fig. 10	**Mounting dimensions of yarn feeder** 1. The yarn feeder should be 120.5m/m apart from the carriage rear leg.
2. The sinker plate keeps the knitting needles up. There is too much gap between the sinker plate and the needle.	**Vertical adjustment of the sinker plate** 1. Fit the carriage on the needle bed and set the holding cam lever at "H". 2. Bring about five knitting needles each to position E at the left end, center and right end of the needle bed. 3. Bend the sinker plate to adjust the gap between the knitting needle stem and the sinker plate to 0.5m/m or less.
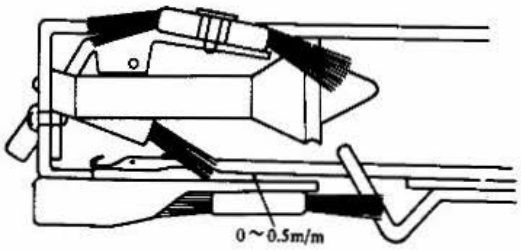 Fig. 11	

Downloaded from www.Manualslib.com manuals search engine

2. A lateral stripe is produced every second row

Cause	Adjustment
1. The right and left parts of the stitch cam are positioned differently. 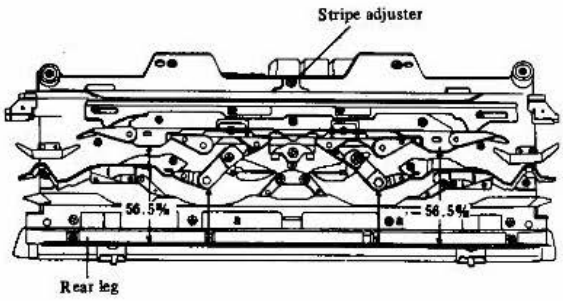 Fig. 12	* The stripe adjusting plate is connected with the stitch cam, and the stitch cam guide plate is connected with the right and left stitch cams. 1. Loosen the stripe adjusting plate clamp screw. Use slide calipers to adjust the stripe adjusting plate so that the length (at a and a') of the right and left parts of the stitch cam will become even. Then tighten the stripe adjusting plate clamp screw. Note: The length difference at the stitch cam (between a and a') should not exceed 0.35 mm. Hint: When the stitch dial is set at 5, the length at the stitch cam: 32.5 mm. 2. After the adjustment, be sure to check it by knitting plain stitch using a medium yarn and with the stitch dial set at 5.

3. The carriage refuses to go midway
The latch of the knitting needle is bent

1. Guide cam A is in wrong position. (Refer to above Fig. 12)	**Mounting dimensions of guide cam A.** 1. Loosen the right and left guide cam A clamp screws and the plate clamp nut. Clamp again after adjusting the distance between guide cam A and the carriage rear leg to 56.5mm. (Fig. 12) Note 1: If guide cam A is not more than 56.5mm apart from the rear leg, the gap between guide cams A and B will be too narrow for the knitting needle. Note 2: If the distance between guide cam A and the rear leg far exceeds 56.5mm, the yarn guide might damage the latch.

Downloaded from www.Manualslib.com manuals search engine

DISASSEMBLING THE BED

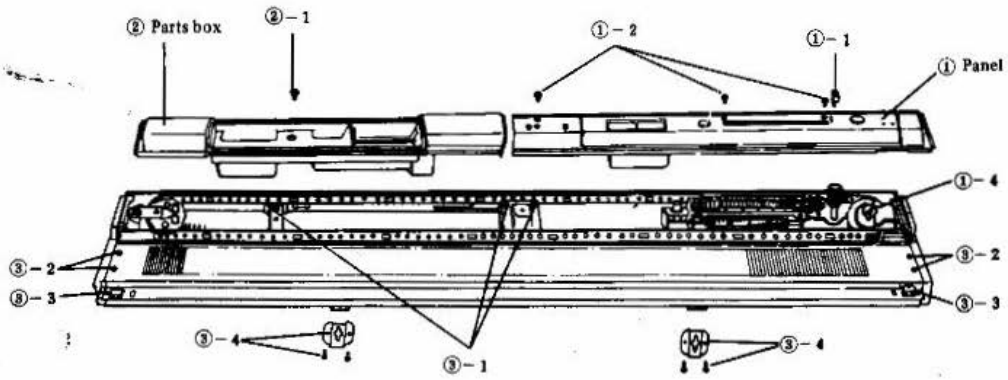

Fig. 13

Name of parts
①-1 Card stop lever knob
①-2 Needle selector panel clamp screw
①-4 Direction indicator
②-1 Parts box clamp screw
③-1 Case reinforcing plate clamp screw
③-2 Needle bed clamp screw A
③-3 Needle bed clamp screw B
③-4 Fastening screw

1. Removing the needle selector panel
   - 1.1 Lift and pull off the card stop lever knob.
   - 1.2 Remove the three needle selector panel clamp screw.
   - 1.3 Slide the panel to the right, lift and take it off.
   - 1.4 Lift and pull off the direction indicator (plastics).

2. Removing the parts box
   - 2.1 Remove the lid of the parts-box and take out the accessories. Remove one parts box clamp screw.
   - 2.2 Slide the parts-box to the right; lift and take it off.

3. Taking out the needle bed
   - 3.1 Remove the two case reinforcing plate A clamp screws and one case reinforcing plate B clamp screw.
   - 3.2 Remove the four right and left needle bed clamp screws (A).
   - 3.3 Remove the two needle bed clamp screws (B) and the right and left parts of the leaf spring.
   - 3.4 Remove the four right and left fastening screws working from the back of the bed and the right and left parts of the mount will become free.
   - 3.5 Take the bed out of its case.

Downloaded from www.Manualslib.com manuals search engine

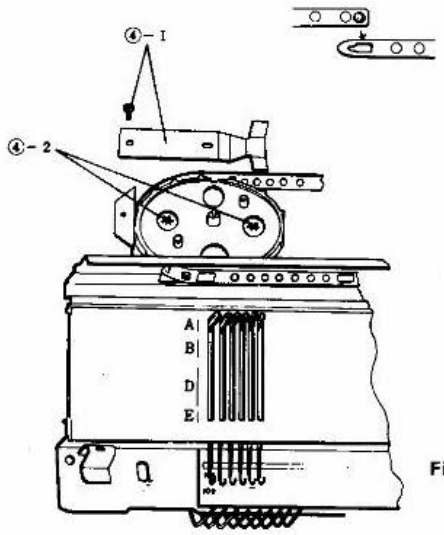

Fig. 14

Measure the distance between the needle selector plate holder and the needle bed lower plate with slide calipers. (Points of measurement: right and left ends and the center.)

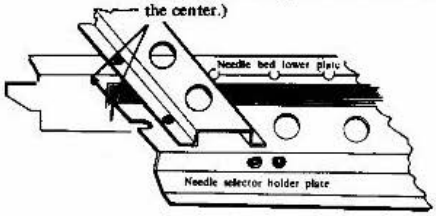

Fig. 15

Name of parts
④-1 Pulley leaf spring; pulley leaf spring clamp screw
④-2 Pulley bearing clamp screw

4. Removing the belt
   - 4.1 Remove the pulley spring clamp screw and pull off the pulley spring.
   - 4.2 Loosen the right and left pulley bearing clamp screws.
   - 4.3 Remove the belt connecting pin and pull off the belt.
   - 4.4 Take care not to lose the rubber washer on the pulley shaft.

Measurement of the distance between the needle selector plate holder and the needle bed lower plate.
Measure the above distance with slide calipers and jot down the result. When reassembling this section, see to it that the same distance will be reproduced.

Downloaded from www.Manualslib.com manuals search engine

Name of parts	
⑤-1	Bed setting clamp screw
⑤-2	Stay mounting screw
⑥-1	Needle selector plate holder set-screw

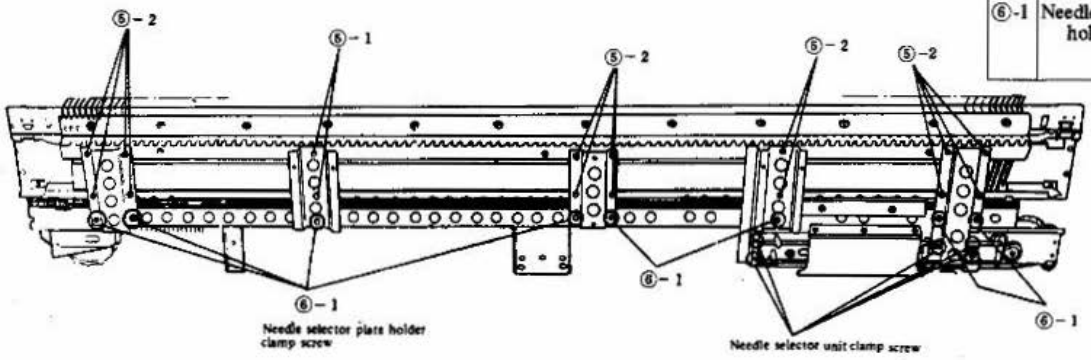

Fig. 16

Remarks:

1. Don't remove the "encircled" eight clamping screws for the needle selector plate holder and the similar five clamping screws for the needle selector unit shown in Figure 16 except at the time of overhauling the needle selector unit.
2. Adjustment of the measurements of fitting the comb can be made without removing stays. (See Page 35)
3. In repairing defective card readers and signal levers of the machine proper, you can detect causes and symptoms of their defect only by removing the card reader support and card reader spring presser.

5. Removing the needle selector unit (with the needle selector plate holder)
   - 5.1 Remove the two bed setting clamp screws.
   - 5.2 Remove the two stay center clamp screws, four left and right stay clamp screws, the needle selector unit and the needle selector plate holder will come off together.

6. Removing the needle selector unit from the needle selector plate holder
   - 6.1 Remove the needle selector unit clamp screws from the center and right parts of the stay, and the needle selector unit will come off the needle selector plate holder.
     It will be also possible to pull out the 24 card signal levers.

Downloaded from www.Manualslib.com manuals search engine

DISASSEMBLING THE NEEDLE SELECTOR PLATE HOLDER

Name of parts
7-1 Signal lever holder clamp screw
7-2 Needle selector plate
7-3 E-shaped snap ring (2.5)

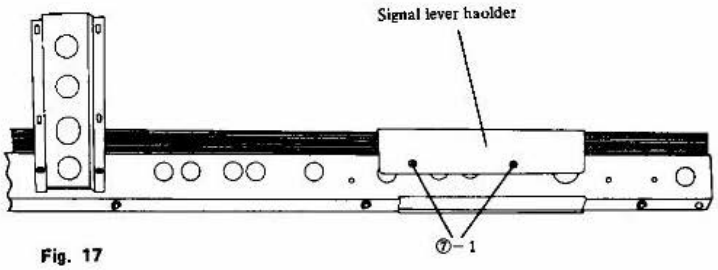

Fig. 17

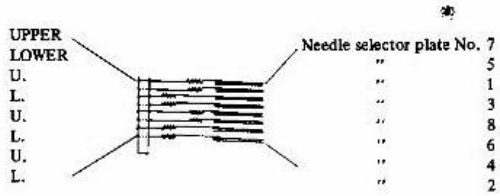

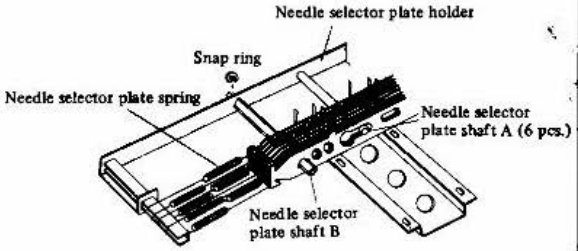

Fig. 18

1.1 Remove two screws securing the signal lever holder, and remove the signal lever holder.
1.2 Remove eight needle selector plate springs. (Before removing the springs, take note of their positions.)
1.3 Remove the E-shaped snap ring (2.5) from the needle selector plate shaft (square) on the rear of the needle selector plate holder, and remove the shaft.
1.4 While sliding the eight needle selector plates one by one to the right, remove them through slots in the needle selector plate shafts A (6 shafts).

Downloaded from www.Manualslib.com manuals search engine

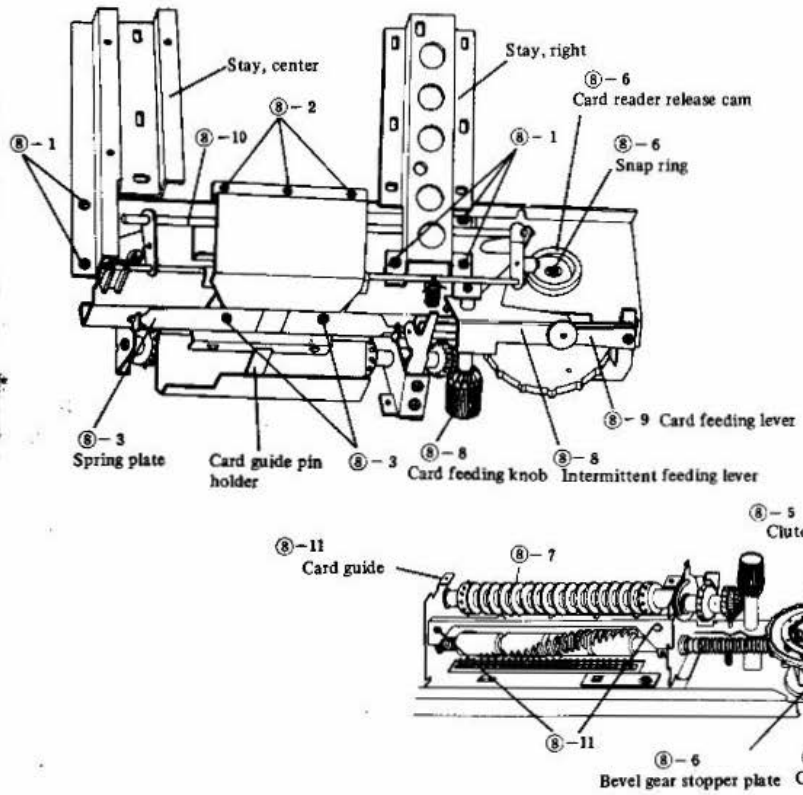

Name of parts
⑧-1 Needle selector unit clamp screw
⑧-2 Card reader spring presser plate clamp screw
⑧-3 Spring plate clamp screw
⑧-3 Spring plate
⑧-4 Belt guide
⑧-5 Clutch spring
⑧-6 Clutch cam assembly
⑧-7 Card feeding roller assembly
⑧-8 Card feeding knob Intermittent feeding lever
⑧-9 Card feeding lever
⑧-10 Card reader release spring
⑧-11 Card guide clamp screw

Downloaded from www.Manualslib.com manuals search engine

DISASSEMBLING THE NEEDLE SELECTOR UNIT

8.1 Remove five screws securing the needle selector units on the center stay and right stay, and remove both stays.
* When installing the center stay and right stay, they must be placed correctly in the original positions. Therefore, it is advisable to mark their positions on both stays with a slotted-head screwdriver.

8.2 Remove three screws securing the card reader spring presser plate, and the card reader spring presser plate and card reader spring can be removed.

8.3 Remove two screws securing the card reader holder plate, and pull it out toward you. (The card guide pin holder - made of plastic - can also be removed at the same time.)
Also 24 card readers can be pulled out.

8.4 Remove two screws (together with washers) on the belt guide plate (right), and pull out the belt guide plate to the right.

8.5 Remove the clutch spring.

8.6 Remove the snap ring located under the clutch shaft fitted into the clutch wheel. Now the washer, card reader release cam, clutch wheel (set) and clutch cam A (shaft) can be removed. Also the card feed cam bevel gear stopper plate in the needle selector unit can be removed.

8.7 Remove the card feeding roller.

8.8 Remove the E-clip 2 located under the card feed knob, and the card feed knob shaft can be pulled out upward. Also the intermittent feeding lever, change lever, intermittent feeding lever spring and card feed knob lock cam can be pulled out upward.

8.9 Remove the step screw from the card feed lever, and the card feed lever can be removed. Also the card feed adjusting plate can be pulled out.

8.10 Remove the card reader release spring from the side of card reader release shaft.

8.11 Remove two screws (right and left) securing the card guide. The card feed base (left) can be pulled out to the left, and the right one can be pulled out to the right.

Downloaded from www.Manualslib.com manuals search engine

ASSEMBLING THE NEEDLE SELECTOR UNIT

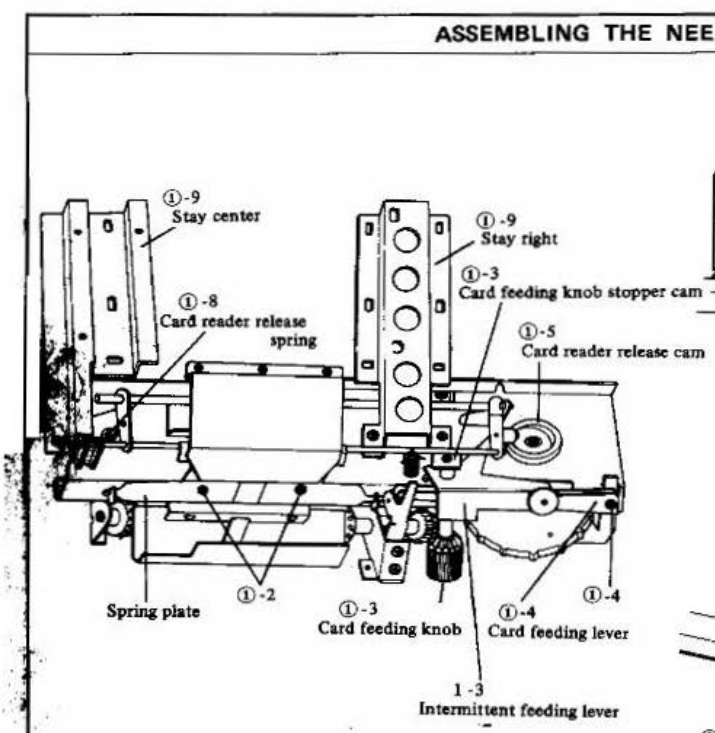

Fig. 21

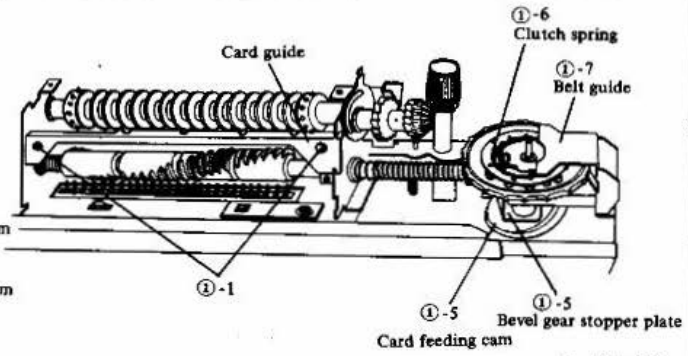

Fig. 22

How to adjust the Rotary cam and Clutch wheel

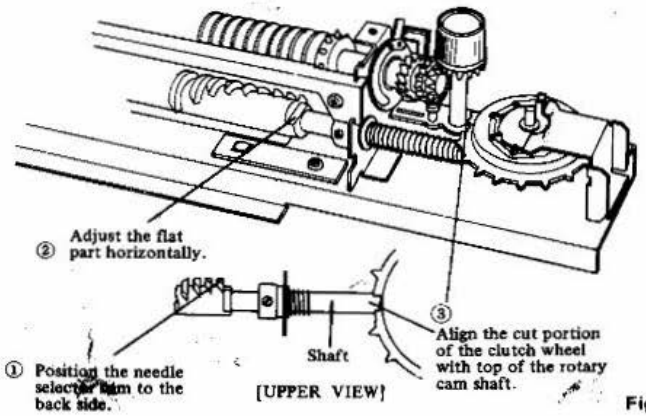

Fig. 23

Downloaded from www.Manualslib.com manuals search engine

1.1 Insert the card guide between the card roller and rotary cam from the left side, and insert the card roller shaft and rotary cam into two holes in the card feed base. Then lock the card feed bases, right and left, with card guide mounting screws.

* Clearance between the card roller and card guide should equal the total thickness 0.6 mm of three punch cards.

1.2 Insert the card roller unit into the needle selector unit. It is necessary to hook the ratchet onto the card feed stopper plate on the card feed base (rigth). Next, lock the card feed bases, right and left, to the rear of the needle selector unit by means of spring plate and clamp screws temporarily.

1.3 Insert the card feed knob stopper cam into the needle selector unit from underside, then fix the intermittent feeding lever, change lever and spring. Insert the card feeding knob shaft into the card feed knob stopper cam, intermittent feeding lever and change lever from top of the needle selector uint.

1.4 Insert the card feed adjusting plate into the needle selector unit, and secure the card feed lever with step screws.
Make suze that the intermittent feeding lever should go between the card feeding lever and round plate.
(Please refer to Fig. 42 on page 40.)

1.5 Insert the card feed cam and bevel gear stopper plate into the needle selector unit from the right side, and insert the clutch wheel and clutch cam A into the needle selector unit from its top. **(Align the cut portion of the clutch wheel with top of the needle selector plate cam, and position the needle selector cam so that the cam lobes are on the other side and the flat portion is in a horizontal position. Then mesh the bevel gears. Refer to the figure on the right on page 27.)** Next, pass the clutch cam A between the card feed cam lobes, and place the card reader return cam from the bottom side of the needle selector unit, and lock with washer and E-shaped stopper ring 2.5.

1.6 Install the clutch spring.

1.7 Insert the belt guide plate (right) into the needle seclector unit from the right side, and lock with screws (with washers).

1.8 Install the card reader release spring.

1.9 Install the center stay and right stay in the positions (maked on the needle selcetor unit with a slotted-head screw driver when disassembled), and secure with screws (with washers).

Card Feed Lever Adjustment

Turn clutch cam A in either direction so that the card feedcam pushes the card feed lever upward. Then push down the right side of the card feed lever until the ratchet begins to move, and lock with step screw.

Downloaded from www.Manualslib.com manuals search engine

ASSEMBLING THE NEEDLE SELECTOR PLATE HOLDER

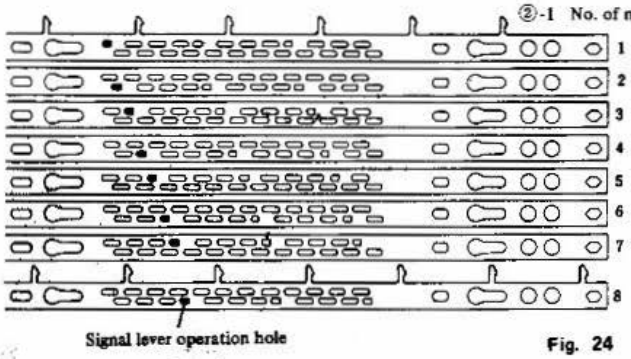

Fig. 24

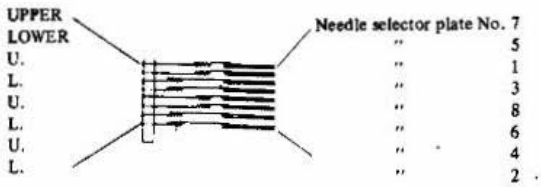

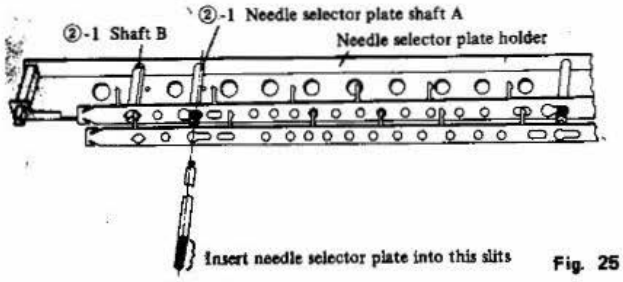

Fig. 25

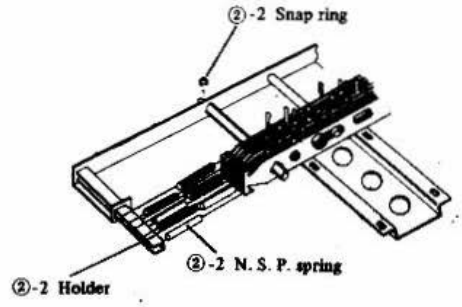

Fig. 26

2.1 Install the needle selector plates on the needle selector plate holder in the order of 7, 5, 1, 3, 8, 6, 4 and 2. Align the needle selector plates with the slits of needle selector plate shafts A (6 pieces), then insert the needle selector plate shafts B and secure with E-shaped snap ring.

2.3 Hook eight needle selector plate springs on spring hooks as illustrated above Fig. 26.
Springs should be hooked on to the lower part of needle selector plates, 5, 3, 6 and 2 and on to the upper of needle selector plates, 7, 1, 8 and 4. In other words, springs are positioned up and down alternately.

Downloaded from www.Manualslib.com manuals search engine

ASSEMBLING THE NEEDLE SELECTOR UNIT IN THE NEEDLE PLATE HOLDER

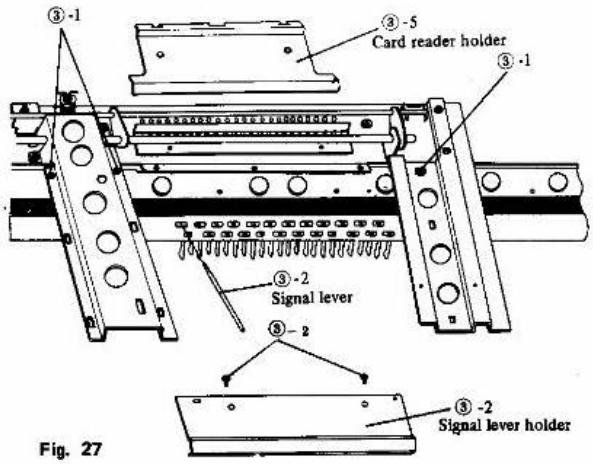

Fig. 27

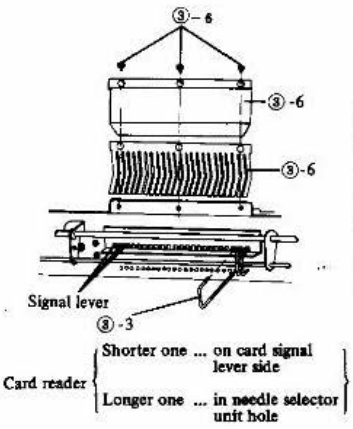

Fig. 28

	Name of parts
③-1	Needle selector unit clamp screw
③-2	Signal lever holder clamp screw
③-3	Card reader
③-5	Card reader holder
③-6	Card reader spring
	Card reader spring presser plate

3.1 Install the neelde selector unit in the needle selector plate holder, and tighten three needle selector unit clamp screws of the center stay and right stay.

3.2 Insert twenty four card signal levers from the needle selector plate side, in the order of smaller ends. Install the signal lever holder, and secure with two screws.

3.3 Hold the needle selector unit with the reverse side front, and insert 24 card readers into the needle selector unit. **Be sure to place the card reader is on the right side of the signal lever.**

3.4 Remove the screws which was secured temporarily at the step 1.2 and remove the spring plates.

3.5 Fit the card guide pin holder (plastic) to the card reader holder plate, and insert right and left spring plates into the tab of the card roller holder right and left. Then secure with two screws.

3.6 Place the card reader spring so that the card reader is positioned under the center of the card reader spring, and hold down the spring with the card reader spring holder. Then secure with three screws.

Installation position of signal lever holder

Allow a clearance (0.1 ~ 0.3 mm) between signal lever holder and needle selector plate 2.

Take care so that needle selector plate 2 is not forced by signal lever holder.

Downloaded from www.Manualslib.com manuals search engine

ASSEMBLING THE NEEDLE SELECTOR PLATE HOLDER IN THE BODY

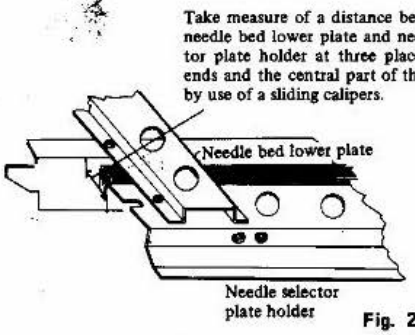

Fig. 29

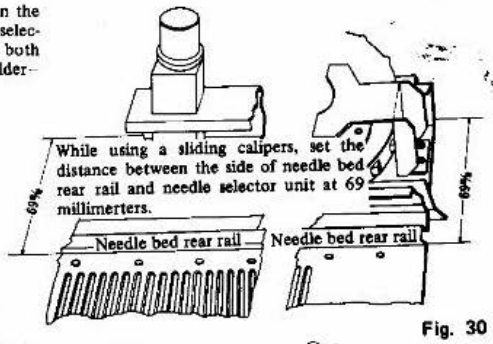

Fig. 30

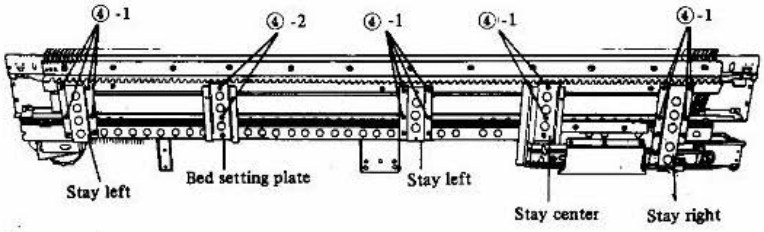

Name of parts	
④-1	Stay fitting screw
④-2	Machine clamp screw

4.1 Set the needle selector unit to the machine body and fasten with four clamp screws for the left, central and right stays each and two clamp screws for bed setting plate temporarily and after making adjustments mentioned below, fasten the needle selector formally.

Fitting of the needle selector plate holder

Fit the needle selector plate holder according to the measurement made with a sliding calipers as described in Figure 29.

Fitting of the needle selector unit

Fit the needle selector unit so that the distance between the unit and the side of needle bed rear rail come to 69 millimeters.

Downloaded from www.Manualslib.com manuals search engine

5. Mounting the belt

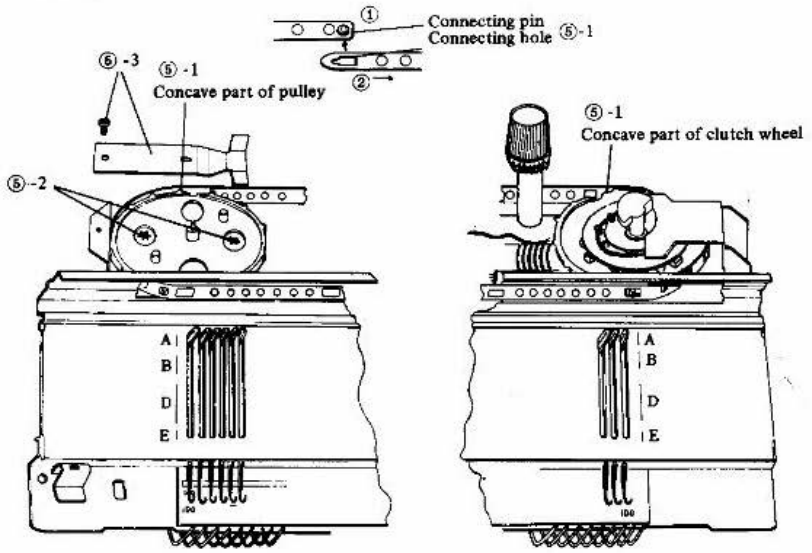

Fig. 32

Name of parts	
⑤-2	Pulley shaft support clamp screw
⑤-3	Pulley leaf spring binding screw

5.1 With push button being kept down, pass the belt at once. Fit the belt so as to make the connecting pin face inside.

1. **On the side of the pulley, pass the belt from your side by fitting the belt connecting pin into the concave part of the pulley.**
2. **On the side of the clutch wheel, pass the belt from your side by fitting the belt connecting hole into the concave part of the clutch wheel to connect both ends of the belt with each other.**

5.2 Stretch the belt to such an extent as there is no slack and tighten right and left clamping screw for the pulley shaft support.

5.3 Put the pulley spring in the pulley shaft and fasten with the binding screw.

Downloaded from www.Manualslib.com manuals search engine

6. Mounting the machine body into the case 7. Mounting the accessories box 8. Mounting the needle selector panel

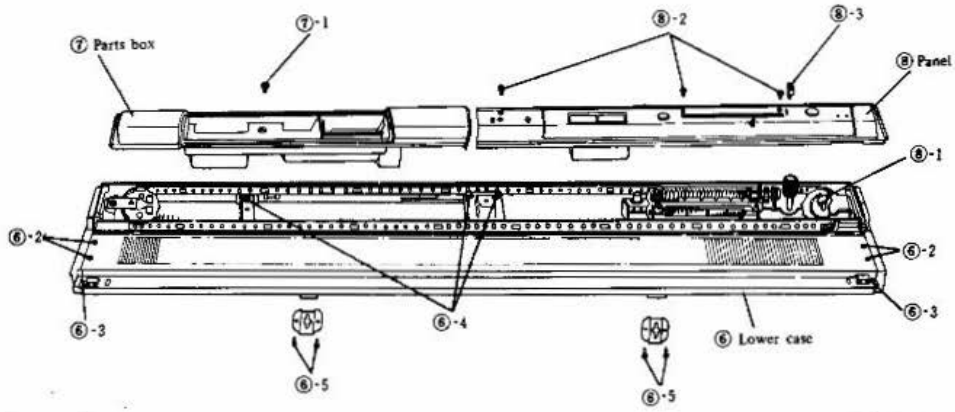

Fig. 33

Name of parts	
⑥-2	Needle bed clamping screw
⑥-3	Needle bed upper plate clamping screw
⑥-4	Case reinforcing plate clamping screw
⑥-5	Machine body fitting plate clamping screw
⑦-1	Accessories box clamping screw
⑧-1	Direction indicator
⑧-2	Needle selector panel clamping screw
⑧-3	Card stop lever knob

6.1 Keep the machine body in the case. Left part is first.

6.2 Tighten two right clamping screws and the equal number of left clamping screw for the needle bed.

6.3 Put the right and left leaf springs in position of the needle bed upper plate and fasten with needle bed upper plate clamping screws.

6.4 Tighten three clamping screws for the case reinforcing plate A and case reinforcing plate B.

6.5 Fit the right and left machine body fitting plates onto the back side of the case with two clamping screws for right and left fitting plates each.

7.1 Keep the accessories box at the left side of the machine body and fasten with clamping screws.

8.1 Insert the direction indicator (plastic-made) into the clutch wheel shaft.

8.2 Keep the needle selector panel at the right side of the machine body and fasten with three needle selector panel clamping screws.

8.3 Insert the card stop lever knob into the lever.

Downloaded from www.Manualslib.com manuals search engine

INSPECTION OF NEEDLE SELECTOR FUNCTIONS

Function	Standards	How to check
Hand-operated card feeding	1. That if the card feed knob is pushed down, then the gear will be engaged. 2. That when the card feed knob is pushed down, card readers come off completely from cards and the rotary cam. 3. That the card feed knob turns smoothly. 4. That click stop of the card roller shaft functions accurately.	1. Make sure by pushing down the card feed knob. 2. Make sure at the same time that you make sure of (1). 3. Insert the card and see if it is feeded. 4. Make sure at the same time that you make sure of (3).
Automatic card feeding & clutch function at a time when rotation direction of clutch wheel is changed.	1. That card readers come off completely from the card roller and rotary cam. 2. That the feed of card roller by means of the latchet is made accurately. 3. That after the above-mentioned actions, the clutch wheel gets into free rotation. 4. That the clutch wheel turns smoothly.	1. Make sure of (1) ~ (4) by turning the clutch wheel by hand. (Tactile impression and visual observation.)
Switching of card stop lever	1. That the card stop lever can be switched smoothly.	1. Make sure by switching the card stop lever by hand.
Engaging of clutch wheel and rotary cam	1. That the clutch wheel and rotary cam are engaged with each other in a correct position.	1. Visual observation.

Downloaded from www.Manualslib.com manuals search engine

1. **Right and left fabric gauges are uneven; length of knitted fabric differs at both ends**

HOW TO ADJUST THE MACHINE BODY

Cause

1. Fitting measurements of right and left combs are uneven.
   (How to make fitting measurements of combs for Models **KH-830)**

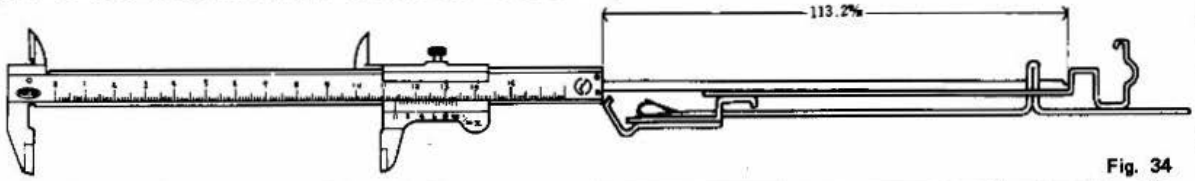

Fig. 34

How to adjust

1. Take out the machine body from the case. (See page 21)
2. Loosen 8 clamping screws for needle bed comb on the stay right, center and left and lower holder plate. (See on page 23)
3. Loosen 12 clamping nuts on the back side of combs with a wrench.
4. Put out three needles each at both ends and in the central part of the needle bed and determine a position of combs so as to let needles come to midway between both combs. (Bilateral adjustment)
5. Set fitting measurement of combs at 113.2 millimeters at both ends and in the central part of the machine body and fasten with clamping nuts. (Longitudial adjustment)
   (In this case, keep it in mind that if such nuts are tightened too hard, screws will be twisted off.)
   (Adjust measurement of fitting combs by use of a sliding calipers and fasten with clamping nuts.)
6. Make fitting measurement of combs for old models of knitters in such a way as shown in Figure 35.
7. After making such adjustments, don't fail to knit 30 rows in plain stitch with the stitch adjusting dial set on "5", 200stitches and by using medium yarn and then measure the length of fabric at the 78th stitch each from center. Make sure that a difference in length between right and left measurements is less than three millimeters. (Apply a load of 1 kilogram, on the average, to fabric. For the 1 kg load is suitable the use of about four claw weights on the cast-on comb long.)

(Reference)
How to make fitting measurement of combs in the case of old models of knitters.

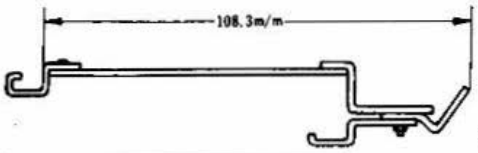

Fig. 35

Model	Fitting measurement of comb
KH-311/KH-551	107.5 mm
KH-561/KH-571	106.5 mm
KH-580	106.8 mm
KH-585/KH-588,800	108.3 mm
KH-820/810	114.3 mm

Downloaded from www.Manualslib.com manuals search engine

2. Needles come to move lightly in part

Cause

1. Needle retaining spring is broken

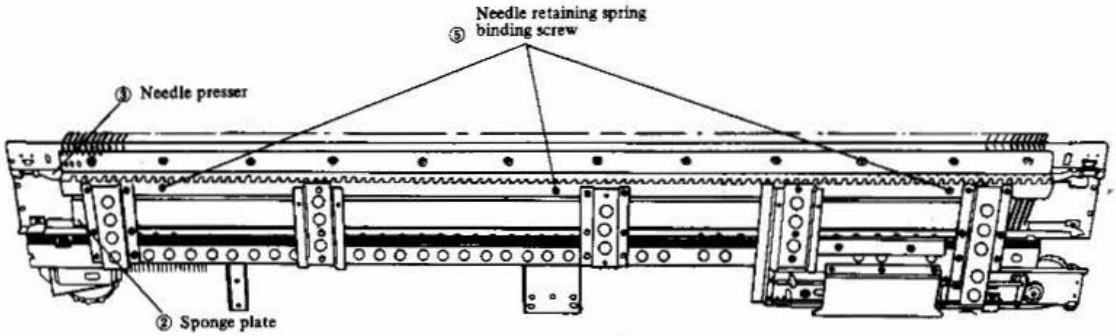

Fig. 36

How to adjust

Removing the needle retaining spring

1. Take out the machine body from the case (See Page 21).
2. Pull out the sponge bar.
3. Pull out the needle presser.
4. Bring forward the plain needles to E-position.
5. Remove three binding screws for the needle retaining spring on the comb and the needle retaining spring will come off.
6. Remove the needle retaining spring from the comb, and pull out the spring.

Fitting the needle retainin spring

1. Fit the needle retaining spring onto the comb and fasten the needle retaining spring on comb with three binding screws for the needle retaining spring.
2. Bring back the needles to B-position.
3. Put the needle presser.
4. Put the sponge bar.
5. Keep the machine body in the case. (See Page 33)

Downloaded from www.Manualslib.com manuals search engine

3. **Needle selection is not correct**

Cause

(Cause 1)

Mounting of Timing belt, Clutch wheel and pulley is not correct.

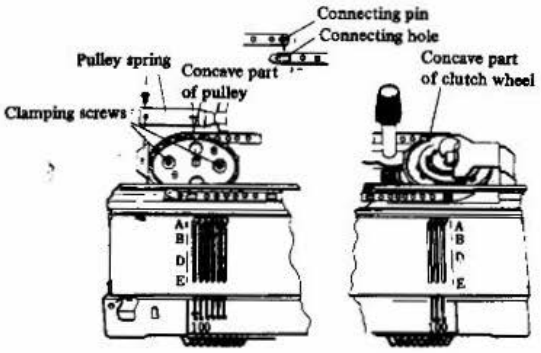

Fig. 37

(Cause 2)

Mounting of rotary cam or clutch wheel is not correct.

The carriage movement is synchronized with the needle selection mechanism with timing belt. Therefore, if there is a time lag, it causes wrong needle selection.

(Correct position of rotary cam and clutch wheel)

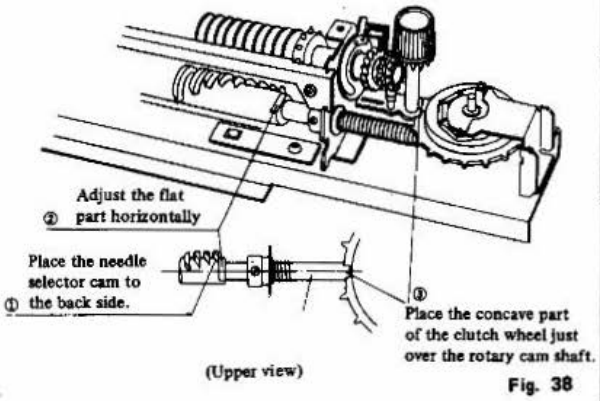

Fig. 38

(Check the position)

When the flat part of rotary cam is placed horizontally, the concave part of clutch wheel must be just over the rotary cam shaft.

How to adjust

The connecting part of timing belt must fit both concave parts of pulley and clutch wheel.

(See on page 32 to adjsut.)

2.1 Remove the timing belt and belt guide plate of the clutch wheel.

2.2 Remove the snap ring for clutch wheel shaft from back side and remove the card feeding cam and card reader release cam.

2.3 Pull up the clutch wheel a little, and turn the clutch wheel to get correct position.

Downloaded from www.Manualslib.com manuals search engine

Cause

(Cause 3)

Mounting of card reader guide plate is not correct.
Position of rotary cam is not correct.

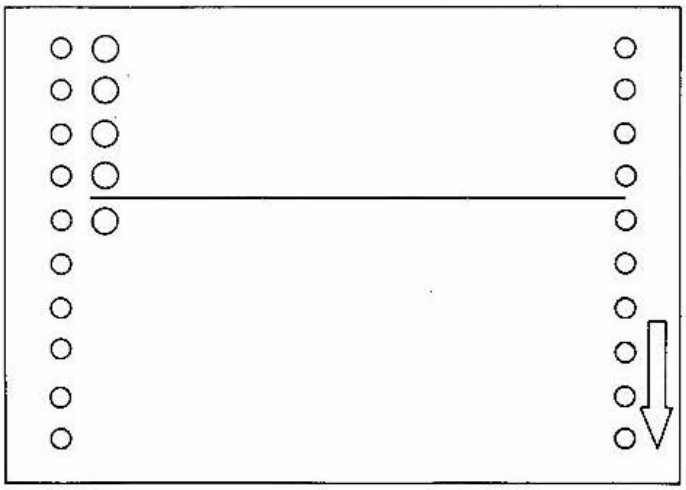

Fig. 1

How to adjust

3.1 Make the punch card for checking as illustrated.

Downloaded from www.Manualslib.com manuals search engine

Cause

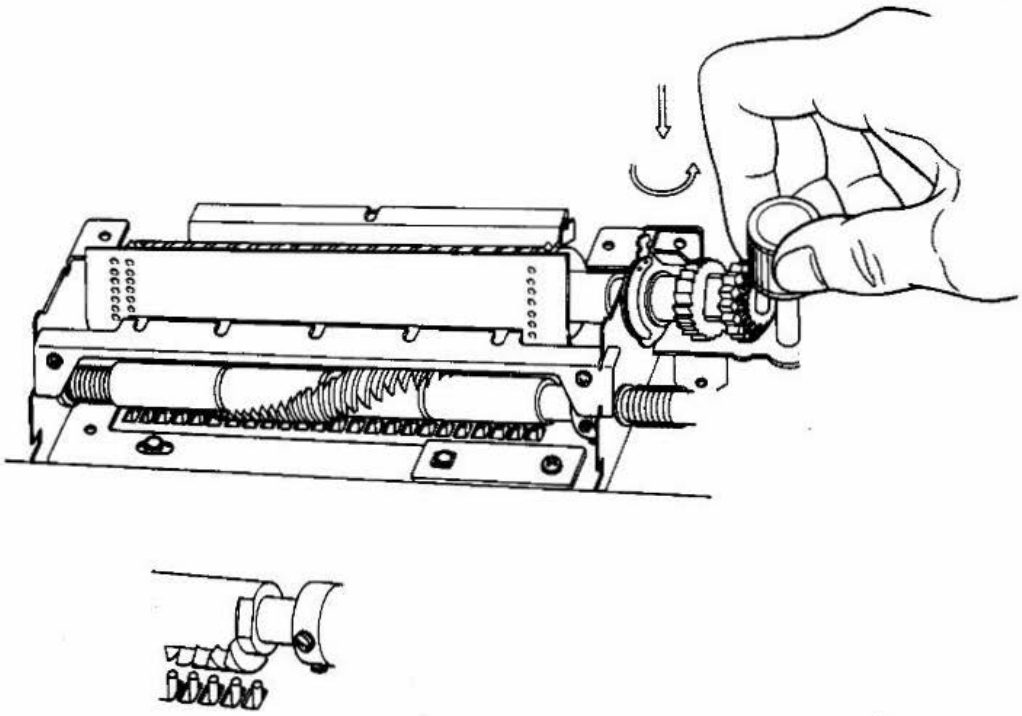

Fig. 2

How to adjust

3.2 Insert the checking punch card and set the starting line. Confirm that all card readers are not in contact with any position of rotary cam.

Downloaded from www.Manualslib.com manuals search engine

Cause

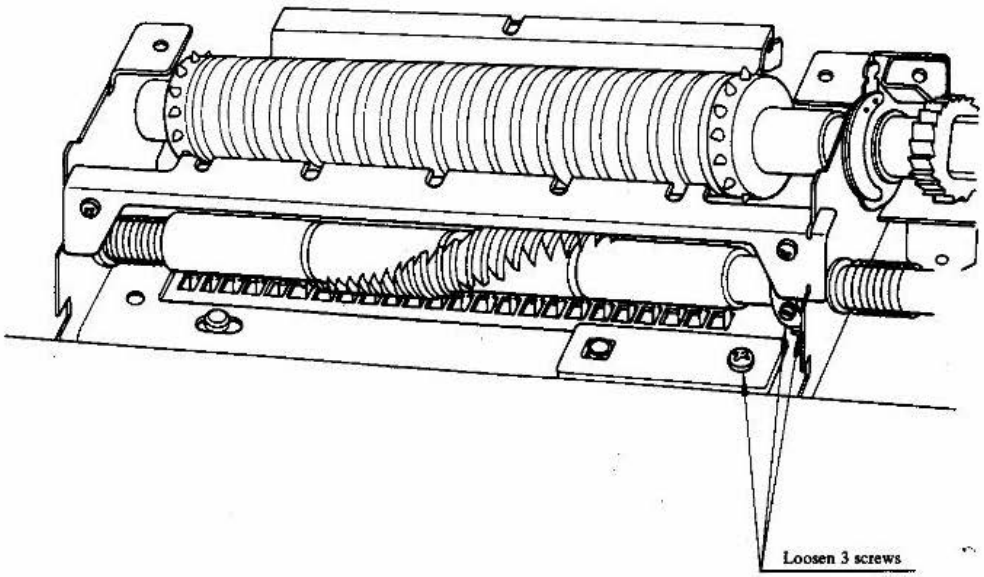

Fig. 3

How to adjust

3.3 Loosen two screws for rotary cam adjusting collar and one for card reader guide stopper.
NOTE: Do not take off screws.

Downloaded from www.Manualslib.com manuals search engine

Cause

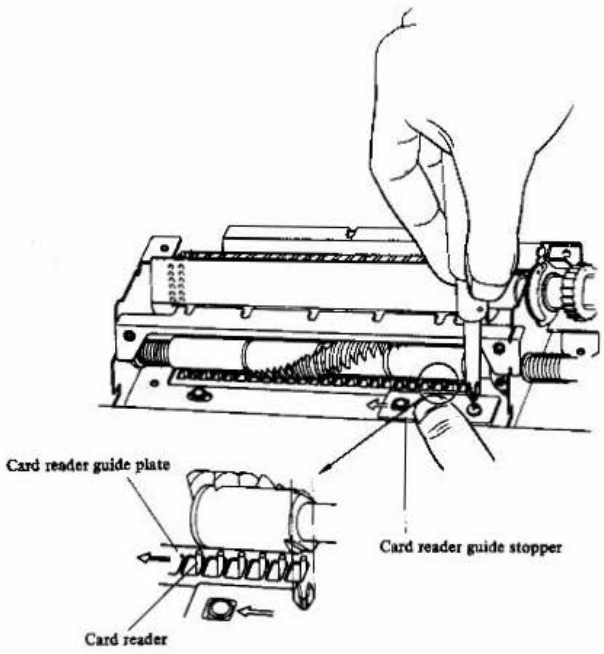

Fig. 4

How to adjust

3.4 By moving the card reader guide stopper, move the card reader guide plate to left hand side until the card readers softly touch the right side of the card reader guide window as shown in the figure. Then fasten the screw.

Downloaded from www.Manualslib.com manuals search engine

Cause

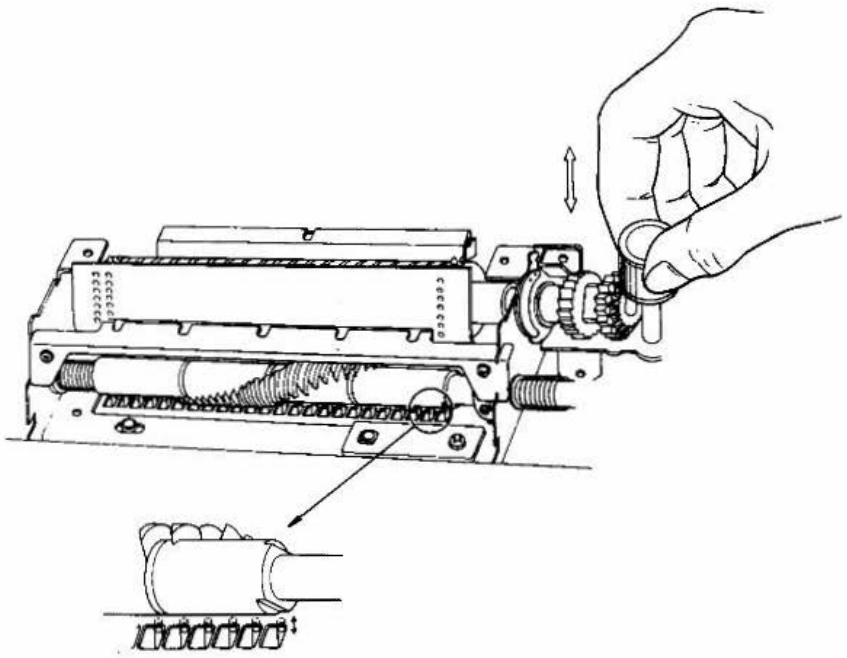

Fig. 5

How to adjust

3.5 Push down the card feeding knob to make the card readers down, then release it. The card readers must come up by spring pressure. If the card reader does not come up by spring pressure, repeat item 3.4.

Downloaded from www.Manualslib.com manuals search engine

Cause

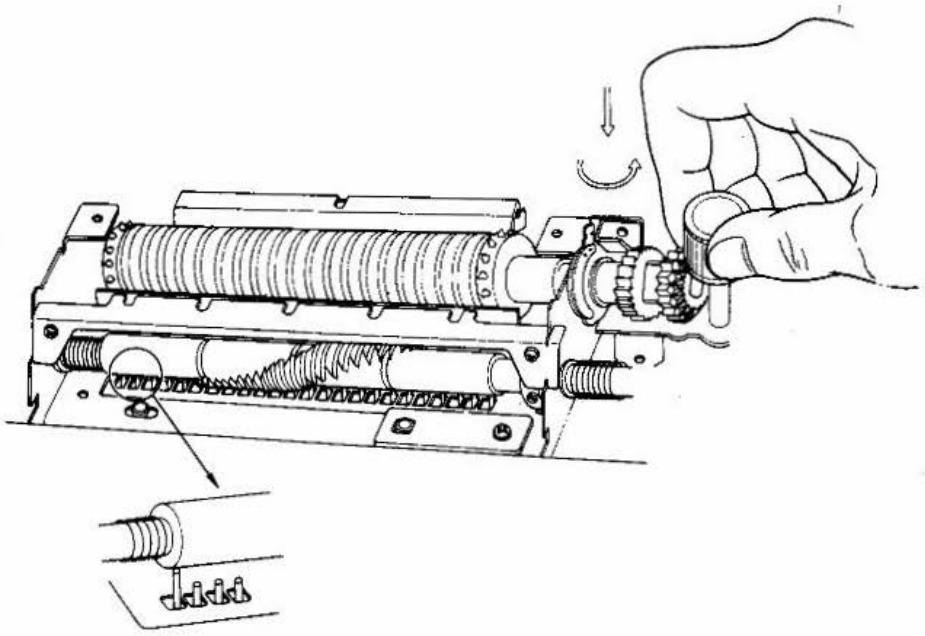

Fig. 6

How to adjust

3.6 Feed the punch card as shown in the figure. (One piece of card reader comes up.)

Downloaded from www.Manualslib.com manuals search engine

Cause

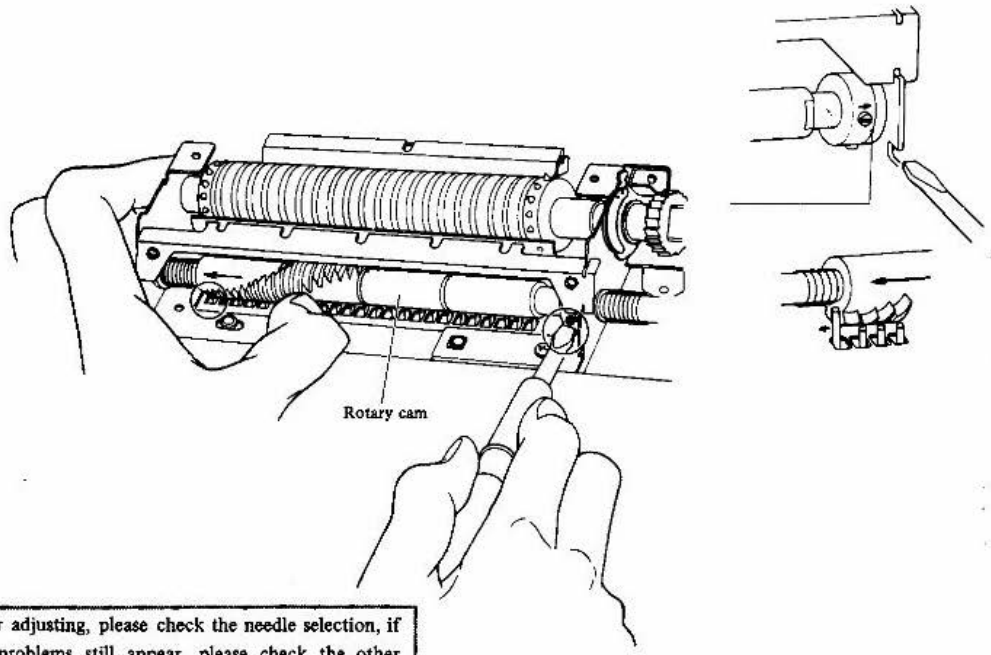

After adjusting, please check the needle selection, if the problems still appear, please check the other part of the needle selection mechanism.

Fig. 7

How to adjust

3.7 Turn the rotary cam so as to let the card reader in working position, and forcefully push the rotary cam to left until the card reader touch the left side of the card reader guide window, then tighten the two screws for the rotary cam adjusting collar securely. In this case, rotary cam adjusting collar must keep in touch with rotary cam holder plate.

Downloaded from www.Manualslib.com manuals search engine

Cause	**(Cause 4)** **Mounting of needle selector unit is not correct.** 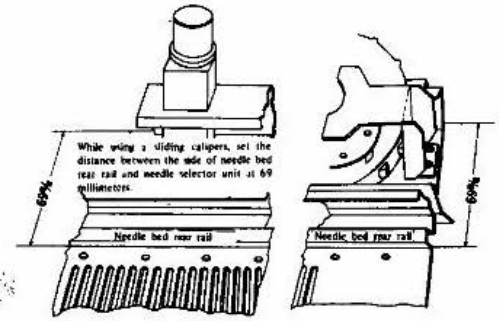 	**(Cause 5)** **Punch card is not fed correctly.** 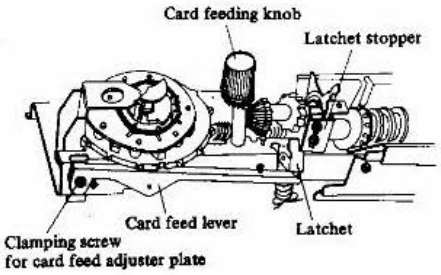 **Fig. 41**
How to adjust	4.1 Take the needle bed out of the case. (See on page 22) 4.2 Loosen 5 clamping screws for stay center. 4.3 Loosen 9 clamping screws for stay right. 4.4 Adjust the position of the needle selector unit by refering the instruction on page 31. 4.5 After adjusting, fasten the screws.	5.1 Take the needle bed out of the case. 5.2 Turn the belt and stop it at a stage where the card feed lever is raised uppermost. 5.3 Loosen the clamping screw for card feed adjuster plate. 5.4 Push down the left side of the card feed lever and sotp the card feed lever when the latchet feed is applied, then tighten the clamping screw for the card feed adjuster plate. 5.5 Loosen two clamping screws for the latchet stopper and push up the latchet to the full until a small gap (0.2–0.5 m/m) is made between the tip of the latchet stopper, then tighten the two clamping screws. CONFIRMATION Make sure: (1) That when the latchet is pushed up to the full, the card won't be fed at a pitch even if the latchet wheel is turned by hand. (2) That when the card is inserted and then the carriage (Change knob is set on KC.) is moved to right and left, the card is fed at a pitch accurately.

Downloaded from www.Manualslib.com manuals search engine

Cause

(Cause 6)

When the card lock lever is switched from the intermittent position to regular feeding position, the punch card is not fed because of the intermittent feed lever does not work smoothly.

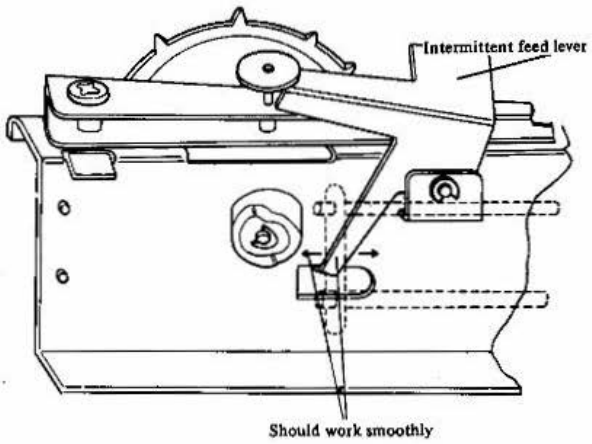

(Cause 7)

The needle is bent.
(How to adjust)
Replace the needle.

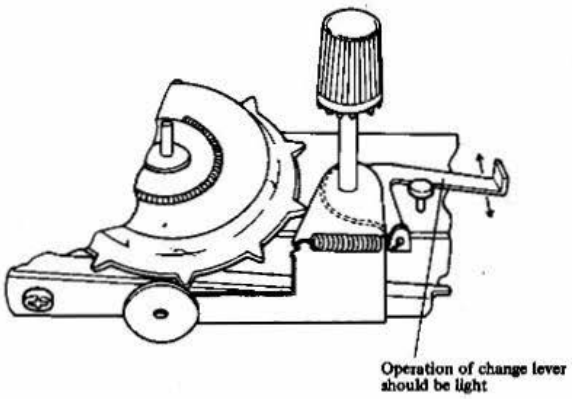

Fig. 42

How to adjust

Make the clearance between the intermittent feed lever and needle selector unit body so as to make the intermittent feed lever freely.

Downloaded from www.Manualslib.com manuals search engine

1. **Stitch drops**

HOW TO ADJUST L CARRIAGE

Cause	How to adjsut
1. Wrong bilateral position of the leaf spring	1.1 Remove L Carriage cover and loosen right and left clamping nuts for the leaf spring.
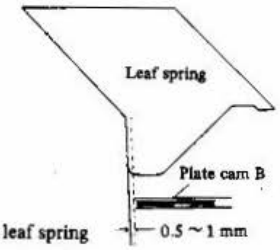 Fig. 42	1.2 By referring to Figure 42, place the leaf spring at a distance of 0.5~1 millimeter inward from the cross section of the place cam B on the basis of the plate cam B and fasten with clamping screws.
2. Wrong vertical position of the leaf spring	2.1 By referring to Figure 43, adjsust the tip of the leaf spring so as to be hightened to the same level as that of the plate cam B.
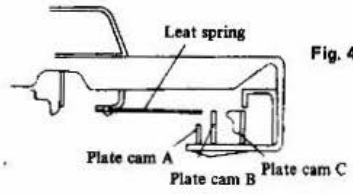 Fig. 43	2.2 Although you may use a pincers or pliers in making such adjustments, be careful not to cause such tools to crook the leaf spring locally.
3. Wrong position of the feed hook	3.1 The feed hook is fixed with the feed hook clamping screw on the side of the sinker plate.
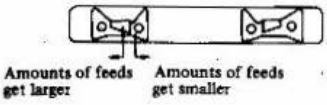 Fig. 44	3.2 Loosen the feed hook clamping screw and move it inward and amounts of feeds will get smaller but move it outward and amounts of feeds will get larger.
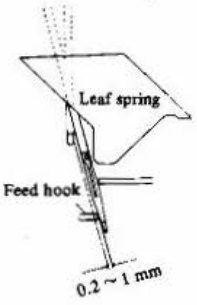 Fig. 45	3.3 By referring to Figure 45, adjust the feed hook so as to let a gap made in a moment the crossed two latch needles come off from the feed hook come below 0.2~1 millimeter.

Downloaded from www.Manualslib.com manuals search engine

Cause	How to adjsut
4. When L carriage sinker plate is crooked. 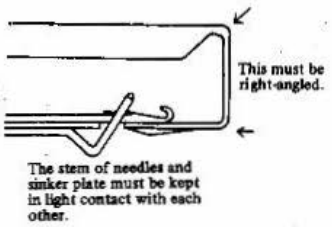 Fig. 46	4.1 Observe the sinker plate sideward and see if it is crooked. 4.2 After confirming it by visual observation, put L Carriage into the needle bed and pull out latch needles to the position D, then inspect a gap between the sinker plate and the stem of latch needles. When latch needles are found raised by the sinker plate (or there is a wide gap), judge that the sinker plate is crooked and adjust the "crooked" section.
5. When main cam is replaced 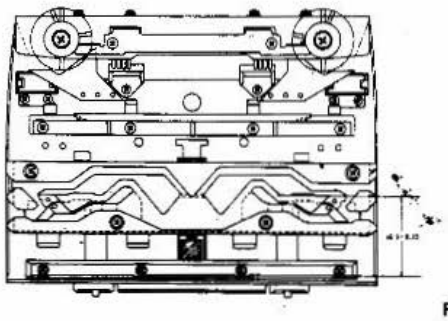 Fig. 47	5.1 Remove right and left clamping screws for the L Carriage cover and take off the cover. 5.2 Remove three clamping screws for main cam. 5.3 From the back side of the L Carriage rear foot, measure by use of a sliding calipers to place main cam in such a way as shown in Figure 47 and fasten with three clamping screws.

Downloaded from www.Manualslib.com manuals search engine

KNIT-LEADER KL-116

Cause

1. Inclining the sheet.

The sheet feeding gear shaft is inclined.

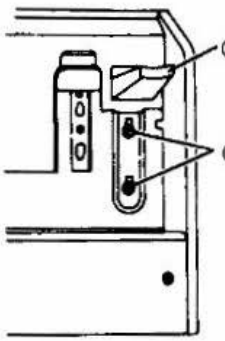

② By moving the sheet button up or down to adjust the position.

① Loosen two screws.

How to adjust

1.1 Loosen two clamping screws.

1.2 By moving the sheet button up or down, adjust the incline of the sheet feeding gear shaft. Then, fasten the scarews. (Insert the sheet into the Knit-leader, and check.)

COMBINATIONS OF KNITTERS AND KNIT-LEADERS

KH \ KL	KL-113	KL-115	KL-116
KH-110	Yes	Stand 406216001 1 pce. Setting plate 486306001 2 pcs. are required additionally. Set the row counter tripper at resting position to operate.	Same as KL-115
KH-588	Yes	Feed connector 405883001 1 pce. Setting plate 486306001 2 pcs. Stand 406216001 1 pce. are required additionally.	Same as KL-115
KH-800	Yes	Impossible	Impossible
KH-820 KH-830	Setting plate 486305001 2 pcs. are required additionally.	Yes, (but colour is not match)	Yes

Downloaded from www.Manualslib.com manuals search engine

RIBBING ATTACHMENT KR–830

*When you attach the ribber to the knitter model KH-820 or KH-830, you can attach the ribber without any adjustment, but if it is necessary, please follow this manual.

*There are three adjusting positions, and once you do these adjustments, you are not required to adjust when you reattach the ribber.

1. Meeting of needles on both beds.

The plain needles and purl needles are directly opposite to each other. If not, adjust the position.

1.1 Set the half pitch lever on P.

1.2 Set the racking indicator on No. 5.

1.3 Loosen two screws (–) which are beside the mark D on the left end of the KR needle bed.

1.4 By turning the grip handle, adjust to get the proper position (KH and KR needles meet) as shown in the figure.

1.5 After adjusting, fasten two screws tightly.

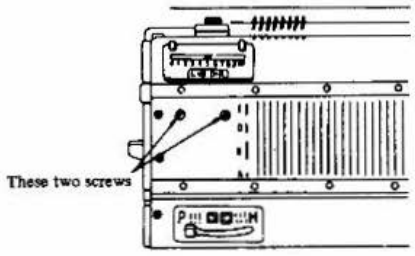

Fig. 49

2. Height of ribber bed.

Set the half pitch lever on H, and bring forward 10 each needles on both ends of KH needle bed. Check the clearance between the back of the KH needle and gate pegs of KR bed.

1.1 ~ 1.7 m/m is correct.

2.1 By pushing down the levers on both bracket, let down the ribber one step. At the back of the ribber, you will find out the nuts. Loosen these nuts by the spanner. Then, return the ribber to original position.

2.2 By moving both height adjusters up or down, obtain the proper height (1.1 ~ 1.7 m/m).

After adjusting, let down the ribber-one step, and fasten the nuts by the spanner. Then lift up the ribber to normal position.

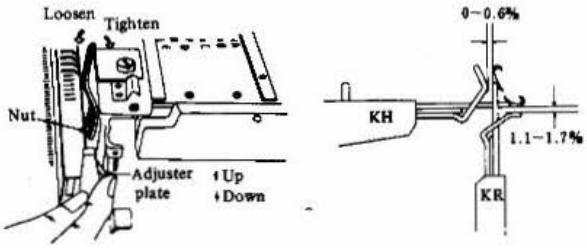

Fig. 50

Downloaded from www.Manualslib.com manuals search engine

3. Distance between two beds.

Loosen the clamps for reinforcing arm.

Bring forward 10 each needles on both ends of KR needle bed. Check the distance between the back of the KR needle and KH gate pegs.

0 ~ 0.6 m/m is correct.

3.1 Loosen both thumb screws by the spanner.

3.2 To obtain the proper distance (0 ~ 0.6 m/m), adjust by turning the bolts on both sides of bracket by the spanner.

Turning to the left ..... close

Turning to the right ..... separate

3.3 After adjusting, go back the needles to A position and fasten both thumb screws.

3.4 Fasten the clamps for reinforcing arm.

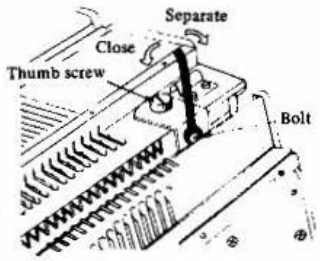

Fig. 51

The other models

In case of attaching KR-810 to KH-820.

Height ..... The clearance between the back of the KH needle and gate pegs of KR bed is 0 - 0.6 m/m.

Distance ..... The distance between the back of the KR needle and KH gate pegs is 0 ~ 0.6 m/m.

In case of attaching KR-810 to KH-830.

Height ..... The clearance between the back of the KH needle and gate pegs of KR bed is 1.1 ~ 1.7 m/m.

Distance ..... The distance between the back of the KR needle and KH gate pegs is 0 ~ 0.6 m/m.

Downloaded from www.Manualslib.com manuals search engine

COMBINATIONS OF KNITTERS AND RIBBERS

KH \ KR	KR-110	KR-586	KR-587	KR-810	KR-830
KH-110	Yes	Impossible	Impossible	Impossible	Impossible
KH-588	Impossible	Yes	②Possible to operate but impossiibe to attach the Extension rails	③Possible to operate but impossible to attach the Extension rails	Impossible
KH-800	Impossible	①Impossible but change to possible by replacing some parts	Yes	Yes	Impossible
KH-820	Impossible	Impossible	Impossible	Yes	Yes
KH-830	Impossible	Impossible	Impossible	④Possible but adjustment is required	Yes

① KH-800/KR-586	② KH-588/KR-587	③ KH-588/KR-810	④ KH-830/KR-810
Bracket, R 407005001 1 pce. Bracket, L 407009001 1 pce. Thumb screw 408777001 2 pcs. Reinforcing clamp 406791001 2 pcs.	Possible to attach the Extension rails by replacing the following parts. Bracket, R 486223001 1 pce. Bracket, L 486224001 1 pce. Screw 405998001 2 pcs. Table clamp 405503001 2 pcs. Reinforcing clamp 405507001 2 pcs.	Possible to attach the Extension rails by replacing the following parts. Bracket, R 486223001 1 pce. Bracket, L 486224001 1 pce. Screw 405998001 2 pcs.	See on page 50~51

Downloaded from www.Manualslib.com manuals search engine

Mounting demensions of each part of KR-830

*Connecting arm

*Set the connecting arm to the KH-carriage and check.

· Mounting demension of yarn feeder·····123.6 m/m
Demension between the latch presser plate and the rear foot of KH carriage.
(For KR-810·····124.2 m/m)

· Mounting demension of magnet box····· 141.5 m/m
Demension between the magnet box and the rear foot of KH carriage.
(Please check when the latch or hook of the needle hits the yarn feeder or magnet holder.)

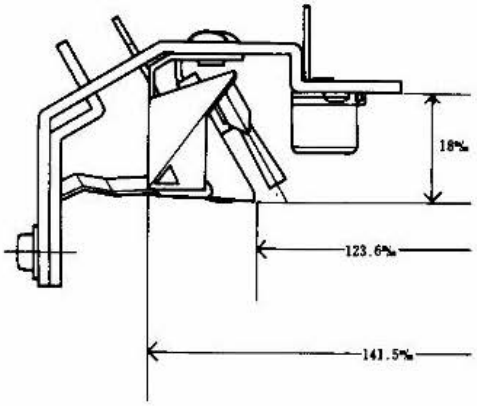

*KR carriage

· Mounting demension of sub raising cam·····14.5 m/m
Demension between the sub raising cam and the rear foot of KR carriage.

· Mounting demension of sub stitch cam·····51.3 m/m
Demension between the sub stitch cam and the rear foot of KR carriage.
(Please check when the KR carriage does not slide on the needle bed smoothly.)

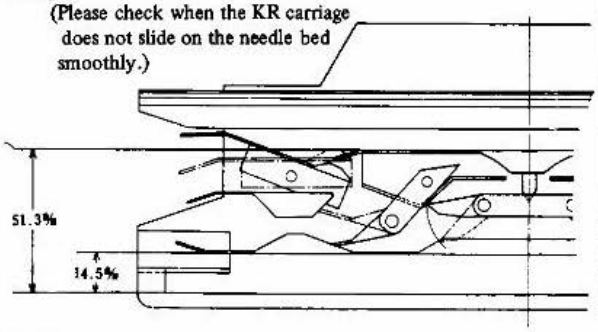

*Needle gate pegs

· Mounting demension of needle gate pegs·····120.4 m/m
(For KR-810·····103.5 m/m)

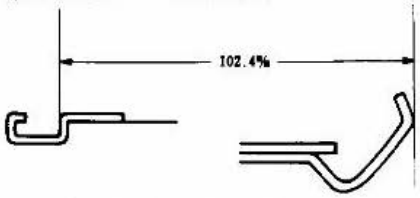

Demension between the needle gate pegs and the rear rail of the needle bed.

Fig. 54

Downloaded from www.Manualslib.com manuals search engine

HOW TO ADJUST THE COLOUR CHANGER

(Trouble)

1. The yarn does not get into the yarn feeder or the separation plate can not catch any yarn, though the changer button is depressed.
2. The yarn gets into the yarn feeder or the separation plate catches the yarn, though the changer button is not depressed.

(How to adjust)

1. Colour changer KHC-820

1.1 Position adjustment

Look at the colour changer from side and check if there is a separation plate just in the center between the yarn guide of changer button depressed and not depressed. (See Fig. 55)

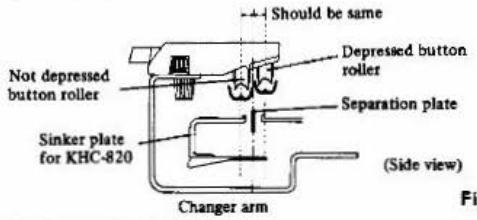

Fig. 55

1.2 Height adjustment

When the changer arm is bent or dropped, please check the following demensions.

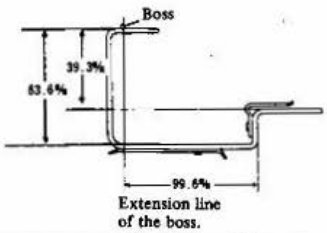

Fig. 56

2. Colour changer KRC-830

2.1 Position adjustment

2.1.1 Place the connected carriage at the left end of the needle bed.

Depress the No. 4 changer button, and move the carriage to right slowly until the separation plate separates the yarns completely.

2.1.2 Look at the colour changer from side and check if there is a separation plate just in the middle between the knitting yarn and resting yarns. (See Fig. 57)

If not, loosen the right screw at the back of changer arm, and move the changer forwards or backwards to get the proper position.

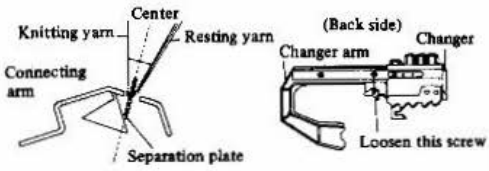

Fig. 57

2.2 Height adjustment

The top of the connecting adjuster plate must be 2 m/m heigher than the signal lever.

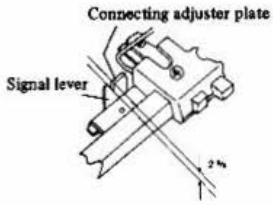

Fig. 58

Downloaded from www.Manualslib.com manuals search engine

TROUBLE SHOOTING

Trouble	Cause	Remedy	Note
Carriage: Does not move easily.	1. Carriage cam sliding part is out of oil.	1. Oil needle butt and stitch cam.	See Instruction manual.
	2. Needle bed sliding part is out of oil.	2. Oil front and rear rails of body and carriage.	
	3. Sinker plate is in contact with gate pegs.	3. Adjust sinker plate position.	See Instruction manual.
	4. Gauge is too tight.	4. Loosen knitting gauge.	
Needle Selector: The same needle does not come out.	1. Needle is bent.	1. Replace the needle.	See Instruction manual.
	2. Needle and rotary cam are not in the right relative position.	2. Adjust rotary cam position.	
Unnecessary neelde sticks out in eighth cycle.	1. Oil has got between needle selector plates.	1. Wipe off the oil.	
	2. Squeezed between signal lever presser and card reader guide, card signal lever does not move easily.	2. Replace needle selector unit.	
	3. Signal lever presser holds needle selector plate.	3. Adjust signal lever presser position.	
	4. Needle is bent or broken.	4. Replace needle.	See Instruction manual.
	5. Needle selector plate spring are engaging with each other.	5. Correct the hook of spring.	

Downloaded from www.Manualslib.com manuals search engine

Trouble	Cause	Remedy	Note
Unnecessary needles stick out irregularly.	1. Too much vertical carriage play. (Front or rear legs of carriage have worn) Abnormal if difference exceeds 0.5 mm. 2. The holes on the needle bed lower plate has worn.	1. Replace front or rear legs of carriage. 2. Replace needle bed.	
Particular needles come out from B postition to D position.	1. Oil has got between needle selector plates. 2. Bent needle. 3. Too much vertical carriage play. 4. The holes on the needle bed lower plate has worn.	1. Wipe off the oil. 2. Replace the needle. 3. Replace front or rear legs of carriage. 4. Replace needle bed.	See Instruction manual.
No needle selection in 24th cycle.	1. Poorly adjusted card feed. (Card hole and card reader are not in position.) 2. Card reader holder plate has got out of position, reducing the gap between card roller and card guide. 3. Card reader fails to make regular vertical motion. 4. Poor adjustment of card reader guide. 5. Poor adjustment of rotary cam (Needs a little shift to left). Insufficient travel of needle selector plate.	1. Adjust card feed lever. 2. Adjust the gap to the normal level of 0.6 mm. 3. Replace needle selector unit. 4. Adjust card reader guide position. 5. Adjust needle selector plate position.	

Downloaded from www.Manualslib.com manuals search engine

Trouble	Cause	Remedy	Note
No needle selection in eighth cycle.	1. Bent needle. 2. The holes on the needle bed lower plate has worn and become larger.	1. Replace the needle. 2. Replace needle bed.	See Instruction manual.
No needle selection between needles Nos. 90 ~100 at carriage direction gate.	1. Carriage connection claw does not catch belt at carriage direction gate. 2. Change knob is not set correctly.	1. Adjust relative position of clutch and belt. 2. Set the change knob correctly.	
L carriage Locks in midway.	1. Too fine gauge. 2. L carriage was not kept down.	1. Widen gauge. 2. Operate L carriage in the right way.	See Instruction manual.
Drop stitches.	1. Poor latch needle operation. 2. Bent comb. 3. Feed hook is out of position. 4. Cam is out of position. 5. Leaf spring is out of position. 6. Separation cam does not work properly. 7. The L-carriage is turned back before passing the last needle.	1. Replace needle. 2. Adjust comb teeth. 3. Adjust both right and left feed hook position. 4. Adjust cam position. 5. Adjust leaf spring position. 6. Replace Separation cam. 7. Take care operation.	See Instruction manual.
Comb teeth catch stitches.	1. Too loose gauge. 2. Yarn catches. 3. Too fast operation. 4. Bent comb teeth.	1. Make gauge finer. 2. Make yarn move smoothly. 3. Operate L carriage slowly. 4. Correct comb teeth.	See Instruction manual.

Downloaded from www.Manualslib.com manuals search engine

Trouble	Cause	Remedy	Note
Knitting: Floating stitches. Stitches get tucked.	1. Too much gap between sinker plate and comb teeth. 2. Poor operation of needle. 3. Too fine gauge.	1. Adjust comb teeth position. 2. Replace needle. 3. Widen gauge.	 See Instruction manual.
Lateral stripe is produced every second row.	1. Stitch cam differs in length between right and left.	1. Make adjustment with the stitch adjuster plate.	
Lateral stripe is produced here and there; not stitched neatly.	1. Carriage operating speed variation. 2. Poor yarn supply.	1. Operate carriage at constant speed. 2. Lessen tension spring tension.	See Instruction manual.
Right and left knitted differently.	1. Comb teeth installed differently.	1. Instal right and left comb teeth in the same way.	
Carriage sticks in Midway.	1. Needle bed is damaged. 2. Needle butt is damaged. 3. Guide cam A is installed wrongly.	1. Repair needle bed. 2. Replace needle. 3. Adjust guide cam position.	See Instruction manual.

Downloaded from www.Manualslib.com manuals search engine

Other ManualsLib Projects

 www.manualslib.com

 www.manualslib.de

 www.manualslib.es

 www.manualslib.fr

 www.manualslib.nl

 www.manualslib.mx

 www.manualslib.tech 30+ Languages