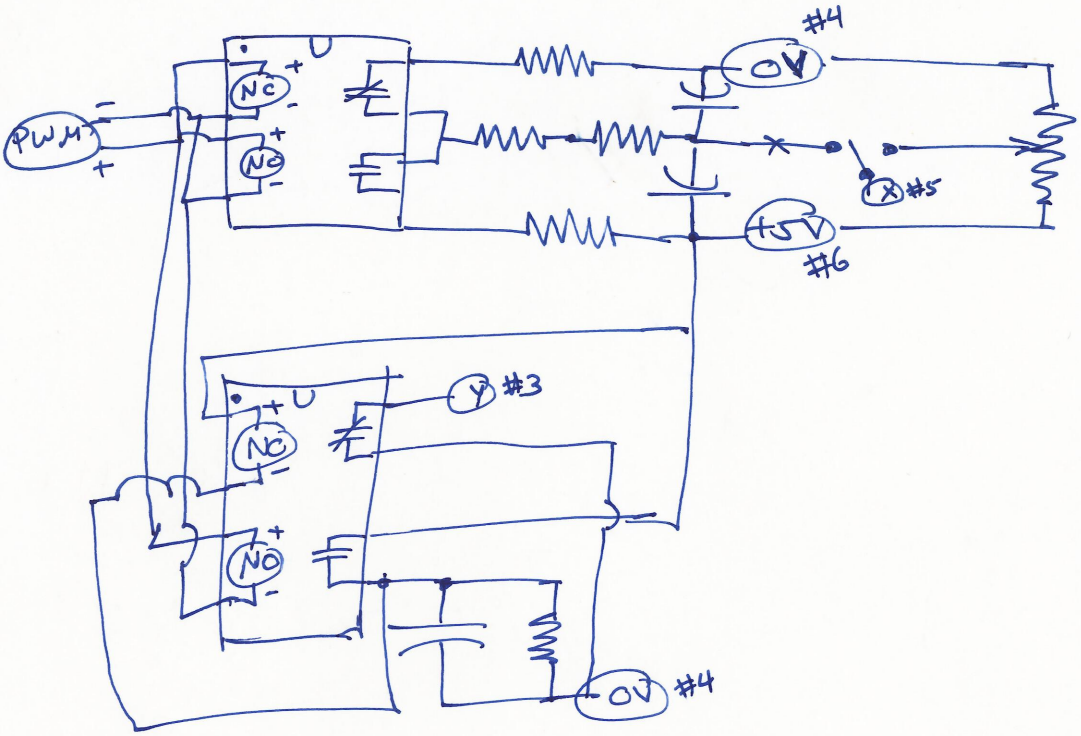
PWM
NC
NO
0V
#4
+5V
#6
X
#5
Y
#3
NC
NO
0V
#4

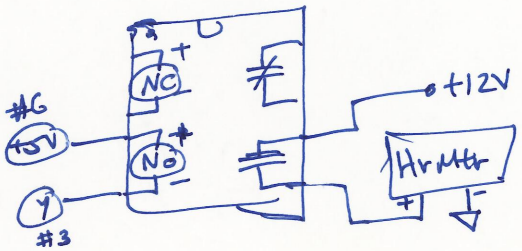
#6
+5V
Y
#3
NC
NO
+12V
Hr Mtr

Laser cutter as of Sept. 2013

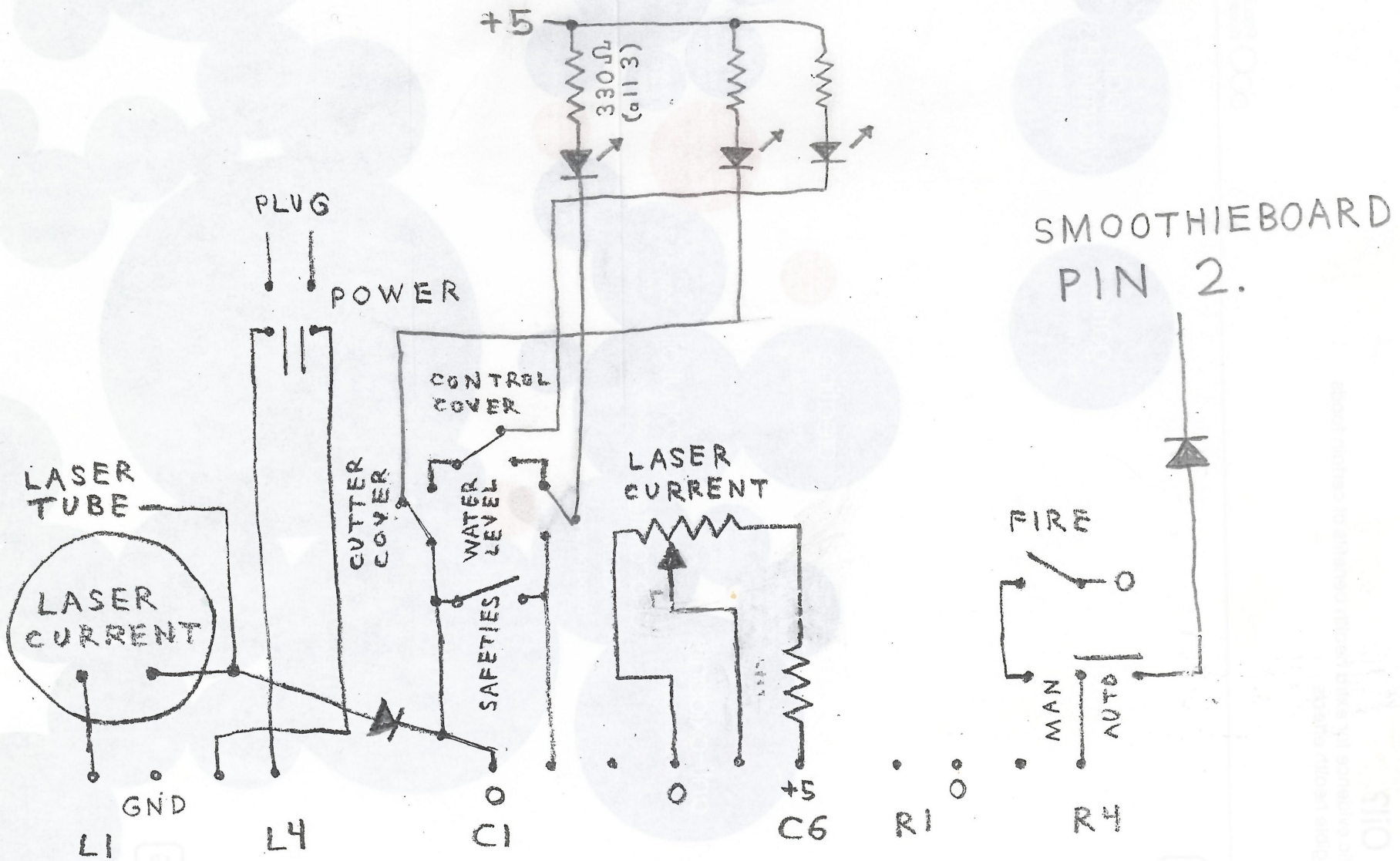

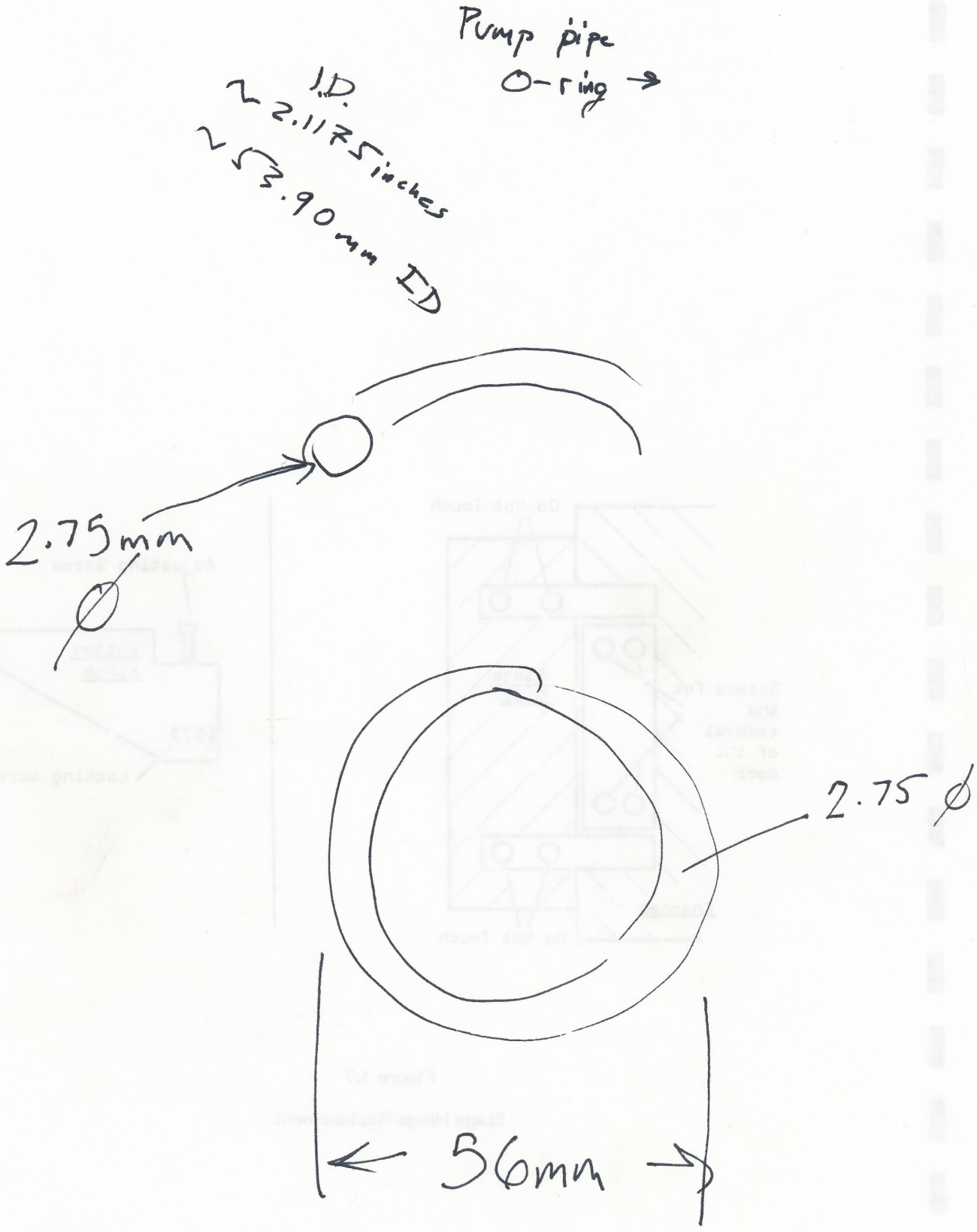
Pump pipe
O-ring
I.D.
2.1175 inches
53.90mm ID
2.75mm
2.75 ø
56mm

1) I replaced the mirror on the head.

2. I cleaned the ~~gla~~ focal glass in the head, w/ ethanol. ~~an~~ sterile gloves and paper towels.

3) It should be cleaned again w/ a better fabric.

upload url: ~~http~~ 192.168.26.96

4. Visicut + add laser ~~pointer~~ cutter import image, engrave everything, turn power to 100, speed to 25

5. print.

6. Results . . .

7. SHOCKED myself several types. Rethink PSU isolation and wiring placement.

New version 081916 – more to come. Thank You for your patience. I feel the manual is as important if not more important than our fine hardware.

Julia, this is an 'extra' for your convenience,
I'm a fan of actual paper manuals, especially if you're installing something.
The final version will be emailed to your soon.

ALL-TEK SYSTEMS

ACR Line

Of

Aftermarket Controller Retrofit Kits

Installation Manual
and K40 Laser Reference
Covers the ACR-SBx only
In WORD 97 .Doc format
If you need another, please ask.

Please don't post this manual or forward it. It's an incomplete work and is personally directed at my Beta and Early users.

I appreciate your cooperation.

Scott Marshall

063016
for V3.2 RevA

Forward:
If you are not a "nerd' with a room-full electronic gadgets, and don't even know how to rewire a lamp, never fear, you will get through this.

Don't understand the workings of your K40 (or it's brethren)? We're going to fix that.

The ACR supports both 5V and 3.3V Aftermarket controllers, and works with Motor power supplies ranging from 12 to 32volts. It is primarily designed to retrofit the K40, which uses 24V motors but will work with most lasers in this range.

For this example, we are assuming you have a K40 "Blue Box" or "CCL" Cheap Chinese Laser. These are generally known as the K40.

The earlier versions of the K40 used a "Moshi" controller, and electronically were substantially different than the current generation of K40

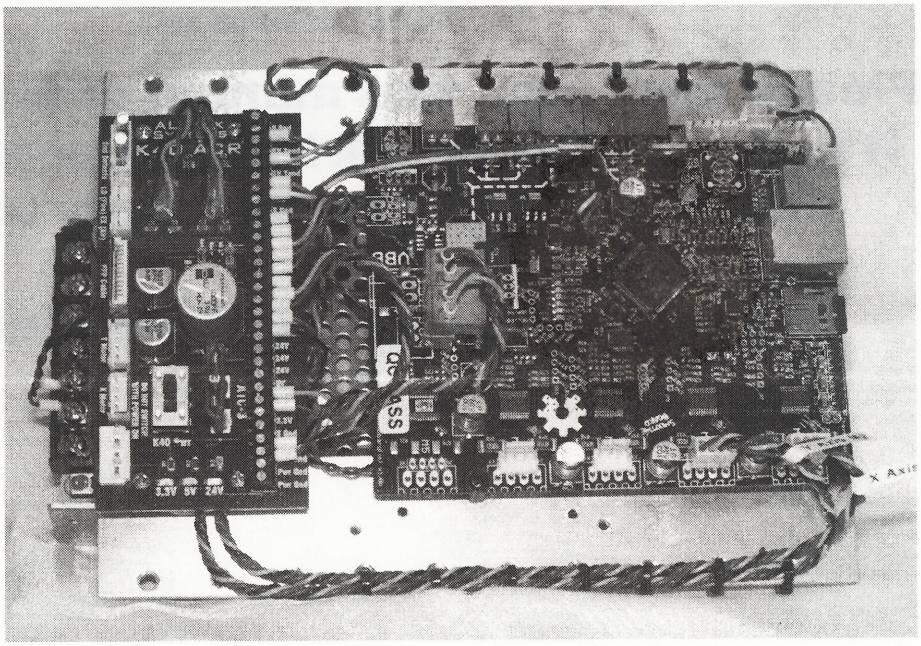

The Popular ACR-SB4

The Story Of the ACR

From online comment to Printed Circuit...

The ACR Board as it came to be known was my response to friends who wanted to upgrade the controller in their K40 Laser but who were unfamiliar with electrical work and knew that to attempt the modification using the sparse and often inaccurate information available online was risky at best. Hobbyists and off duty engineers could sort thru the information and work out a plan, but the uninitiated would likely just ruin some expensive parts. (A risk even for us engineers)

I was approached numerous times by people who wanted me to install an aftermarket controller (usually a Smoothieboard) in their K40 for cash. Often a LOT of CASH!

I refused, for 2 reasons.

The 1st was my poor health, and this caused concern that I could finish the work in a timely manner. (The same deal-breaker preventing me from going into actual business)

The 2nd is the amount of money involved, which was frankly, often unfair. These folks were so intent on getting their machine performing to it's potential, they would offer large amounts of money in an attempt to change my mind. Frequently, they offered me upwards of $1000 plus parts and shipping to do the work. They argued (not incorrectly) that if they could get a good working Laser for $3000, they would be saving $15.000 to $20,000 over an equal Commercial machine.

On the other side of the coin were the people like me who had to do it themselves because even a used Epilog was out of the question financially. The K40 is often the reason most of can own a laser at all.

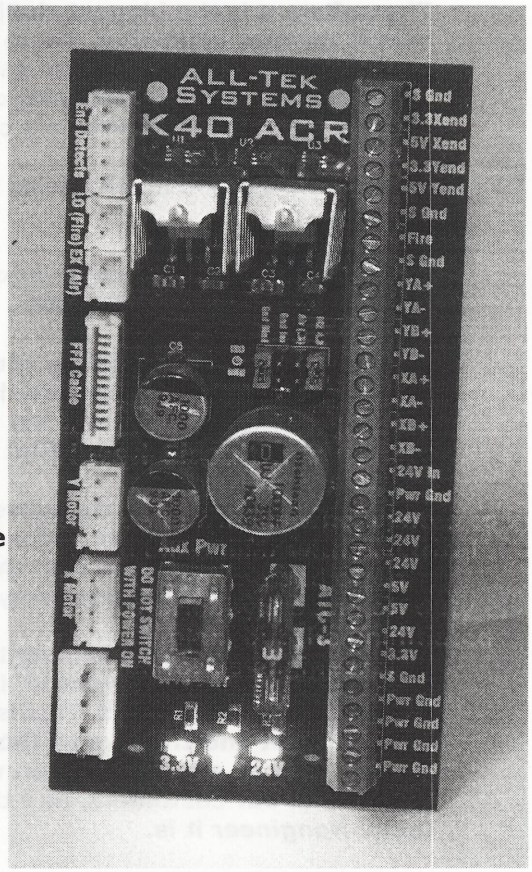

THE ACR BOARD

Heart of the Line

I'm still capable of engineering work, but have to do it on my own schedule. Sometimes that means completing a job weeks or months late. That's simply NOT how business works.
For years, I had owned and operated ALL-Tek Systems, specializing in solving Industrial manufacturing problems. I had become known as a a problem solver in manufacturing engineering circles.

This success was cut short by a bad surgery which left me in a coma for months, and was followed by 80+ more surgeries to try to keep me alive. I've made several attempts at re-starting ALL-Tek, but my poor health has been the problem each time.

This time I looked at it as a way to help my online friends, and decided if I simply explained to people my position, and took no ones money before the product was in

the box, people wouldn't mind waiting. So far, people understand and it's going well.

The letters ACR stand for Aftermarket Controller Retrofit kit.

The ACR is a clever package that plugs into the K40 Chassis, physically and electronically replacing the stock M2nano. The K40 thinks it's still talking to a M2nano, but the signals are processed and fed to the aftermarket controller of your choice. If you select the 'Full Kit" you receive a "Plug and Play" module, fully assembled, programmed and test fired in a real K40. The module has all the necessary parts in one package, all mated and ready to run.

The user only needs to remove the M2nano, plug the ACR module in, and start it up. The software is the biggest challenge, but that will be the situation however you install the new controller. There are occasional inconsistincies in K40s, but usually the ACR will run great just as delivered. Changes, if needed are usually accomplished by simply changing a character or 2 to reverse a motor etc, or in the worst case, moving a wire or 2 around in a connector. Detailed instructions (these) are provided.

This makes the job much easier if you're a skilled technician, and POSSIBLE if you are not.

Mr. Yuusuf Salahuddin came into the effort a few months in, as webmaster and "nongineer" advisor and tester.

As I once said, "just because you're not skilled in a particular field doesn't mean you're a dummy". With me it's the software and web design end of things I am lacking in. More specifically, my skills are very limited since 1998, the year I took ill. It's like time froze for me. What was leading edge in '98 is history. Literally.

Yuusuf fills the gap, his response to my offer was to tell me all the ways he was not qualified. An honest man!, I don't care if he can't turn the computer on, his heart is in the task. He's onboard with the mission, and willing to work with a idealistic engineer who's 6000 miles away. What a team!

The Nongineer term is his invention and is (in my opinion) inspired. What do you call a 'non-electrically experienced' individual? It's hard to do without implying the person is less than smart. This is NOT the case at all. People in other fields are just as intelligent and creative as those who work in the electronics field. As I once put it, "he could be a brain surgeon who enjoys laser cutting" A term was needed for the majority of our customers, and these folks are my friends, I don't want to insult them. *Nongineer* it is.

Right now that's the ALL-Tek Team. Yuusuf an I cordially invite you to the website, ALL-TEKSYSTEMS.com and join the user group. It's going to be evolving as we have more material to present and user feedback rolls in.

Products will be added to the site as quickly as I can put them together. Next up will be the "Switchable", a kit in the spirit of the ACR which allows you to switch from the stock M2nano and your aftermarket controller in seconds.

Then we will have a safety retrofit kit, The "Safety 1st kit", The "Waterworks", a water temp, flow and level display/warning/shutdown, and the "Electric Company", a power supply/control panel kit which displays the Laser Voltage and Current in real time on a pair of beautiful corner hung analog meters.

There is much more coming. I look forward to presenting my ideas to you.
If you have a request, let me know what's on your mind.

Contents

not currently applicable

The Goal, Overview of the Controller Upgrade.....Page 3

Removal of the M2nano – Out with the old.....Page 4

The Goal

Overview of a Controller Upgrade
Setting yourself up for Success

The first thing to do when getting into unknown territory is to familiarize yourself with the situation. By doing so, you'll be putting into your consciousness little tidbits that won't mean much now, but will be 'Ah-ha' – I know that! moments when you're up to your elbows in Laser parts.

Do your due diligence and read through this manual, then your Aftermarket Controller Manual before setting up for the installation. You'll be way ahead even if you don't think you're picking up much, rest assured it will pay off.

Once through that, consider your work area, clear out some working space, maybe lay out a sheet on the floor in the event you drop the odd small part. This isn't a very complicated procedure but little precautions pay off big when the unforeseen happens.

**>>>

PLEASE DON"T ROLL PAST THIS PAGE! Read it as a PERSONAL FAVOR to me.

A word on your Safety (The Lasers comes later):

While you're setting up, now is a good time to disconnect the line cord and put a wrap or 2 of tape around the end. This will prevent inadvertent connection of the cord while thinking it's the cord to something else. On USA type cords, a small tie wrap thru the holes in the tips of the prongs is a good lockout technique.

This may seem overkill, rest assured, IT IS NOT. It has happened personally to me, and I have over 40 years experience servicing line powered equipment. It's no fun getting a shock and it is indeed potentially fatal. PLEASE BE SAFE!

While I'm on the subject I must point out that as lovable as the K40 is, it's pretty much illegal everywhere on earth. All free countries, that I'm aware of, forbid the K40s sale as a consumer product. This is because of the lack of any safety interlocks, proper manual, warning decals, proper and safe wiring practices and lack of any (UL, CSA, CE Mark etc) consumer safety certification.

The K40 is a device containing a 400+watt 15000 volt power supply. This power supply has the voltage to effect an INSTANTLY FATAL shock. Current is deadly, but it requires voltage for it to flow.
The K40 has plenty of voltage to be potentially fatal, and can easily supply the current to realize this potential. This is NOT the high voltage but low current of a spark plug wire or Propane grill ignitor. You won't say ouch and shake your hand. You will be knocked to the floor, possibly dead. You don't even have to touch a connection to be electrocuted, 15000volts will arc across surprising distances. Videos of people testing a power supply by arcing the hot wire to ground will kill someone eventually, don't be conned into trying this method, the risks are just too high. It's Russian Roulette with electricity. Don't play!

DO NOT go anywhere near the laser tube or power supply with the line cord attached. The switches, controller and wiring in the K40 are low quality and cannot be depended on to protect you. When working on the K40 UNPLUG and LOCK OUT the cord (details above) This is the law in commercial locations most places in the world, and for good reason. Unexpected operation has injured many a service tech.

Besides the 15KV power supply, you have invisible light which can TAKE YOUR SIGHT in a split second. No warning, Flash, you are blind. Please use proper eyewear and keep all doors closed whenever the Laser is enabled. I put a square of plywood over the transfer hole in the left rear of the cutting bay as soon as I'm done cutting. Make a "blocker" like this, and use it. It's not foolproof, but adds a level of safety should the controller fail and fire the laser unexpectedly.

Buy and use a set of Laser goggles made for CO2 lasers (10800um)
Regular polycarbonate safety glasses absorb a lot of light in this range, and are better then nothing, but isn't your sight worth 40 bucks? Visitors/helpers, anyone in the room needs protection and education on the hazards as well. Don't blind your friends.

The K40 also has AC mains (Line in the US) exposed in the electronics bay. In many devices this is the worst hazard, but it's overshadowed by the above hazards on the K40. AC Mains is 240VAC in many parts of the world, and 120VAC in the US. Both will generally give you a very nasty shock, but can easily kill you if you get unlucky and make a good connection or have a health problem. Keep everything closed when using the K40, and locked out when working on it.

ALL-TEK will be introducing kits to address these shortcomings soon. Until then, treat your K40 accordingly and think ahead. It can and will hurt you if you let it.

Removal

Preparing for dis-assembly & Removal of the M2nano

Before proceeding, Make sure the line cord is disconnected, taped, locked out or otherwise prevented from being inadvertently plugged into a receptacle.

Open the right section of the K40, and free it by sliding the L shaped hinge pin over to disengage it from the pivot hole. Tilt the panel cover and slide the opposite pin free. Carefully lay it in back of the K40, taking care not to pull loose any wires or stress them. Tape in place if necessary to keep it from hanging on the wiring.

Examine the inside of the control panel. On the bottom you will see the Power supply Unit (PSU) – it's an aluminum box with wires entering the end facing you. On the front wall of the K40 you will see the M2nano control board.
Get a feel for how things are run, keeping an eye out for anything that doesn't look right. If you see something you feel is not right, broken, burned, melted or just looks "wrong" and aren't sure if it's a problem, please contact ALL-TEK Support. We'll help you sort it out. Never try to modify a Laser with pre-existing problems, you'll only complicate the situation.

If the compartment is dirty , clean it up, vacuum out debris, wipe away with dry paper towels what the vacuum won't remove. It doesn't have to be perfect.
One of the K40s shortcomings is the open air path between the electrical enclosure and the cutting compartment. This causes a lot of airborne dirt to settle there.

Out with the Old....

Get out you camera, flashlight and notebook. Photograph the electrical box from all angles, and write down anything you think you may need to know later on.

You will notice the M2nano is mounted to a a sheetmetal subpanel which mounts to the lip of the chassis and the floor. Remove the screws securing it. You will probably have to tip up the K40 chassis a bit to access the 2 screws thru the floor. Be careful not to disturb the wiring to the panel cover while doing so.

You should now have the M2nano swinging loose on it's subpanel secured only by the wires. This will make it easier to disconnect the cable connectors from the M2nano. If you have a helper around, it's time to call him/her to help. A 2nd set of hands here helps. If the wiring is restricting movement so that you cannot swing the M2nano horizontal, remove the 4 screws holding it to the sub-panel. Sometimes the M2nano is secured with nylon 'pin latches'. If yours is, squeeze each one with the needlenose while gently pulling up on that corner of the M2nano, releasing the tab. Work around the board, being careful not to let the tabs re-engage. Once removed, discard the sub-panel, it will not be re-used.

The M2nano has 8 Connectors on it, but not all are in use. Exactly which ones are in use will vary from Laser to laser, and even between different K40s. Not all "Blue Box" laser cutters are made in the same shop, or to the same standards so it would seem. No need for concern, your ACR board has taken this into account, and will work just fine with whatever connectors your laser uses.

Removal

Preparing for dis-assembly & Removal of the M2nano

Before proceeding, Make sure the line cord is disconnected, taped, locked out or otherwise prevented from being inadvertently plugged into a receptacle.

Open the right section of the K40, and free it by sliding the L shaped hinge pin over to disengage it from the pivot hole. Tilt the panel cover and slide the opposite pin free. Carefully lay it in back of the K40, taking care not to pull loose any wires or stress them. Tape in place if necessary to keep it from hanging on the wiring.

Examine the inside of the control panel. On the bottom you will see the Power supply Unit (PSU) – it's an aluminum box with wires entering the end facing you. On the front wall of the K40 you will see the M2nano control board.
Get a feel for how things are run, keeping an eye out for anything that doesn't look right. If you see something you feel is not right, broken, burned, melted or just looks "wrong" and aren't sure if it's a problem, please contact ALL-TEK Support. We'll help you sort it out. Never try to modify a Laser with pre-existing problems, you'll only complicate the situation.

If the compartment is dirty , clean it up, vacuum out debris, wipe away with dry paper towels what the vacuum won't remove. It doesn't have to be perfect.
One of the K40s shortcomings is the open air path between the electrical enclosure and the cutting compartment. This causes a lot of airborne dirt to settle there.

Out with the Old....

Get out you camera, flashlight and notebook. Photograph the electrical box from all angles, and write down anything you think you may need to know later on.

You will notice the M2nano is mounted to a a sheetmetal subpanel which mounts to the lip of the chassis and the floor. Remove the screws securing it. You will probably have to tip up the K40 chassis a bit to access the 2 screws thru the floor. Be careful not to disturb the wiring to the panel cover while doing so.

You should now have the M2nano swinging loose on it's subpanel secured only by the wires. This will make it easier to disconnect the cable connectors from the M2nano. If you have a helper around, it's time to call him/her to help. A 2nd set of hands here helps. If the wiring is restricting movement so that you cannot swing the M2nano horizontal, remove the 4 screws holding it to the sub-panel. Sometimes the M2nano is secured with nylon 'pin latches'. If yours is, squeeze each one with the needlenose while gently pulling up on that corner of the M2nano, releasing the tab. Work around the board, being careful not to let the tabs re-engage. Once removed, discard the sub-panel, it will not be re-used.

The M2nano has 8 Connectors on it, but not all are in use. Exactly which ones are in use will vary from Laser to laser, and even between different K40s. Not all "Blue Box" laser cutters are made in the same shop, or to the same standards so it would seem. No need for concern, your ACR board has taken this into account, and will work just fine with whatever connectors your laser uses.

The "Extraction" Continues.....

You'll notice one cable (on MOST lasers) that is quite different. It looks like a strip of white tape about 5/8" (16mm) wide. This is known as a FFC cable.



Before removing it, get out your Sharpie and draw a line on the side facing the edge of the board. Draw the line tight to the white connector On most FFC cables this side will have a blue reinforcing tab here. The line will make re-installation easier by showing which side faces out, and verify you have the cable seated completely.

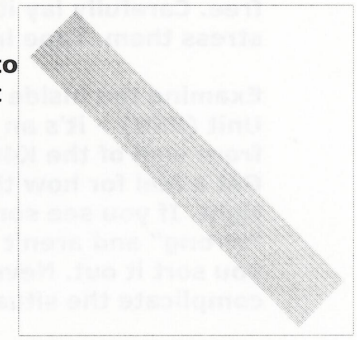

Now proceed with the removal of the FFC cable.
Remove it by gently pulling straight out and rocking side to side gently. It should come free with moderate effort. If it seems excessively tight, a small squirt of WD-40 or silicone spray will help it come free. This is the only cable we will pull on directly.

Note that one side of the cable has 12 electrical contacts on it (silver 'pads') – Remember this for re-installation. They will be opposite the Sharpie line.

Go ahead and remove the rest of the connectors, paying attention to what comes from where. NEVER pull on the wires, grasp the connector body with your fingers or pliers and 'rock' it up and out.

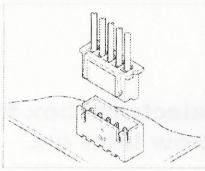

To the right of the the FFC cable is a connector for your X Motor (mis-marked as Y on some M2nano boards) which is often not in use because the same connections are present in the FFC connector. If your laser has one, remove it by gently pulling the body upward with small pliers. Have a helper hold the M2nano in place. Mark the connector "X" with your Sharpie.

To the right of that is the "Y" motor connector, which WILL be occupied. Remove it as you did the "X" connector. Mark it "Y" with the Sharpie.

Next to the "X" connector is the Power supply connector which will have 4 wires running to the PSU on the floor of the enclosure. This often a bit short hence restricts movement of the M2nano and forces you to work down in the electrical enclosure. You may find it easier to 1st remove it from the power supply (same procedure). It has a "latch" on it, release the latch by inserting your 1/8" Screwdriver between the connector body and the tab which hold it in place. Gently twist the screwdriver while pulling on the connector and it will release. It takes a bit of skill here to operate the screwdriver and needlenose simultaneously. If you have a helper, let them run one tool.

It's easy from here. In fact, depending on your particular laser, you may be standing there with the M2nano in your hand.

If not, next we have the End of travel optical limit switch connector. It's just like the X & Y motor connectors except it's a little wider, with 5 pins instead of 4. These functions are also duplicated in the FFC Cable, so you usually have one or the other, rarely both. Gently pull on the body and it's yours.

Next in line are the "LO" and "EX" connectors, both identical 2 pin connectors. Again, these are the same style as motor and limit switch connectors. Pull gently and you're done. Mark accordingly if you need to.

Congratulations, it's out.

Next we reverse the process....

The ACR Board looks a bit similar to the M2nano, and it's NOT an accident. It emulates the M2nano in connection and function (as far as your K40 Chassis knows, it will still be talking to an M2nano).

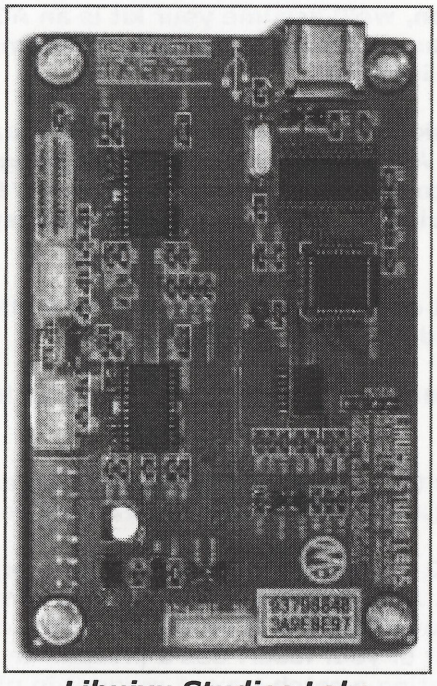

Lihuiyu Studios Labs M2nano

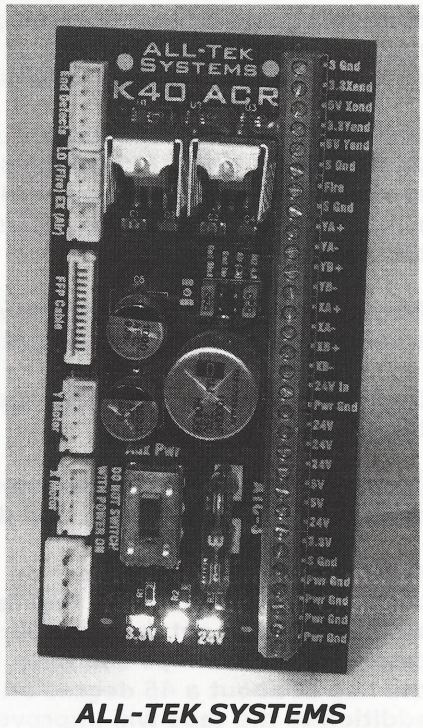

ALL-TEK SYSTEMS Aftermarket Controller Retrofit Board

Consequently, installation will be very much the reverse of the extraction. Freshen Coffee and turn the page...

Installation of the ACR Module
(The ACR-SB4,5 and other complete modules)

Here we will install the ACR Board in the M2nanos place

Here we install a typical Top of the line kit. These kits include the power supply, with the ACR communications board and the Controller of your choice, all wired up configured and tested. For this discussion, we'll assume your kit is an ACR-SB4, the most popular ACR kit we sell. If yours has a different controller, there may be minor differences, but the connections are are identical.

Locate the included template, some masking tape, and one each high quality sharp 1/16"(1mm) and 1/8"(3mm) drill bits. Additional tools that make things go easier are a Shop vac, a larger size drill bit or countersink for deburring the 1/8" holes, and a magnet to catch steel particles from drilling (cover the magnet with tape to make cleaning it easier)

Install the sharp 1/16" (actual size isn't critical, this drill is just for a pilot hole, but smaller drill bits start easier without skidding) drill bit in your drill.

On the right front of the K40 apply the template using masking tape as indicated on the template.

Locate the 2 drilling locations and verify there is no wiring or anything else behind them for the drill bit to hit and damage (a short drill bit is good if you have one)

Tape a piece of paper across an inch or 2 below where the holes are marked. You want this paper to form a flap facing up. Apply a strip of masking tape with the adhesive facing out to the paper just above where it is taped top the panel. This will catch any metal chips and keep them out of your laser. Use a piece of tape to hold the flap at about a 45 degree angle, creating a catch tray. A magnet in place of or in addition to the tape will improve the "catch" rate. Alternatively, if your helper is around, have them hold a shop vac hose where the drill will break through the panel, drawing off the chips as they are produced.

Carefully START the drill on each of holes (2) marked on the template. Use a solid pressure (but don't break the drill) and start the drill slowly to prevent walking of the bit. if it walks, stop and start over. Once cutting in the proper place, drill on through, taking care not to break the small drill bit. A prick or center punch are NOT recommended as the shock isn't good for the Laser tube or mirror alignment.

Once you have the pilot holes drilled, remove the template and drill them to the required 1/8" final diameter.

Using a large (1/4" to 3/8") drill bit or countersink in your hand, deburr the inside of each hole. A carpenters knife or similar can be used as well.

Clean away any metal particles that made it into K40 enclosure and remove the paper trap and any remaining metal particles.

If you decide you want to enlarge the factory cable opening on the right front corner of the K40's chassis, now would be the best time.

Enlarging the Cable Entry opening.
Mounting a panel mount extension
(Optional)

Take every precaution to prevent metal particles from entering the cabinet and do not generate excessive vibration or shock while cutting the steel. A Dremel with a good supply of cutoff wheels works well. Wear safety glasses as you should when doing any work, but Dremel cutoff wheels REALLY require them. Round the inside edges well and cover with tape or a grommet to protect your cables from damage.

>>>

>>>

Wiring the ACR Module

Ok, Refill coffee, and maybe read ahead this section. It's simple, but there are things to watch out for. If you're not familiar with electronic connectors, read thru the Connector Connection in the back of this manual.

Your ACR module is in place, with wires all around it. Most of this is exactly what it seems, just match them up and connect. There are some additional considerations though. Follow thru step by step and We'll explain what each wire does as we go. Being familiar with what each cable does may help you down the road, and it's good to know how it all works.

The list of stuff needed here is short. Your electronic screwdriver, maybe some small needlenose pliers.

The worst of it is 1st. If you connected the line supply wires before mounting the ACR Module, you already know a little about them. If they were already connected as in most kits, here's the skinny on connecting your AC Line (Mains) connections.

Mains or Line power is AC, or alternating current. There is no + or -. 2 wires carry power from the K40's power supply input to the auxiliary power supply input. These have been made Red, in keeping with how most K40 are built.

I like trivia, especially electrical trivia, so I've added some fun facts about Line Voltage (Mains). If you want to just get on converting your Laser, jump to the <<<Landing line>>> below, For some Electrical history, read on...

A little complication...

In North America and a few other regions, line voltage (the common name for it in those regions) is normally 120vac and is supplied using 2 wires. A Neutral and Hot. (ground comes later) Neutral is generally white, and Hot is generally Black. Why? A cool fact few know is that as homes were 1st being built with electricity in the early 1900's, insulated wire was insulated with tar soaked cotton cloth. Thus the Black for Hot. Hot is so called because it's HOT to touch. If you're standing on the ground and touch a Hot wire, you get a shock. The reason is that the other side of the power is 'roughly' tied to earth ground. This was done to save money. If one wire was tied to ground, there was a low chance of a shock when you also were on the ground. Thus it was left uninsulated to save money. Back in these days, wire was often made from many strands, held together with zinc or tin. The Zinc or Tin coating turns WHITE when it oxidizes with time. Thus White is Neutral and Black is Hot. As safety became a concern, all wires required insulation and a ground was added. It carries no current unless something goes wrong. If a short were to occur between a Hot and the metal case of say, a Laser cutter (OK, a little futuristic back then.. let's say a toaster instead), you could be shocked by the now Hot case. By attaching a ground wire to the case, the current would flow to ground thru it, rather than you, and cause a fuse to blow.

(Wiring Photos Here)

Now, in Europe, they were a little slower putting electricity in homes, so they had the advantage of avoiding all the trial and error learning (and shocking) that the Americans went through. When it came time for power in European homes, they realized both wires in an AC system carry an identical, but opposite signal. So, let's mark them the same, Since we know right off we want a ground, and insulation on all the wires, we don't have any reason to tie one 'roughly' to ground. Thus 2 wires, color variable (Past Tarred Cotton), but often Red (as a warning for danger, I'd guess), The ground is generally Green, in the US, and Green in Europe, sometimes Yellow and Green. Since the Europeans got to learn from the US mistakes, they were already insulating the wires and grounding everything, so why not raise the voltage and save money by using thinner wire? (twice the voltage requires half the wire size to carry the same power safely)
Thus, 220V in Europe, and 2 red wires feeding our Mains (also a European term) on our Laser cutter.

<<<Landing line>>>
Land here to bypass the history of line power

WARNING

Now that you've got the ACR module mounted, be extra careful working around it, the components on both of the circuit boards are exposed and fragile. Metal fragments, lost hardware or wire bits will all instantly damage the circuit boards when powered up. Remember, even a dropped tool can harm the circuitry on these boards. Work like a surgeon, keep track of all the stuff, and make sure you have everything accounted for before powering up anything. If any tools screws or parts go missing, find them before powering up.

Ok, The wire colors we are looking at to feed power into our Auxiliary power supply are 2 Red and 1 Green. The 2 Red ones are Mains (or Line)power, depending on where you live, this is 120vac or 220vac. ALL-TEK has you covered on that catch. Your ACR module runs on either one, there's not even a switch to flip. It just knows.

Make sure all your power is disconnected and locked out or otherwise made safe. (yes – again)

On your factory K40 power supply, you'll find a connector on the left side of the side that faces frontward. It's usually green, sometimes white.

Note: ALL-TEK can provide a plug-in way to make this connection if you're uncomfortable connecting these 3 wires. You do need to let us know before we ship which color connector you have (a photo is best). We recommend connecting the wires individually, as it eliminates 2 connectors and thus is generally more reliable.

The connector has 4 pins on it. You can unplug this connector from the power supply to make the hookup easier, then plug it back in.

The leftmost pin (screw) (PIN 1) has a (usually Orange or Pink) wire connected to it. This is the Laser tube ground (thru the Ma meter) and carries 15000 volts to ground. Just make sure its connected firmly and move on. It's not dangerous unless it's unhooked.

The 2nd pin (PIN 2) has a Green/Yellow or Green wire attached to it. This is safety ground, and we need to connect our safety ground to it. Loosen the screw and slide in the tip of the Green wire coming from the ACR Module. Tighten firmly (see previous Hint), pull gently on each of the wires to make sure they are secure.

The 3rd pin (PIN 3) is one of the Line (or Mains) power. Connect either Red wire coming from the ACR power supply to it using the same procedure as with the ground.

The 4th Pin (PIN 4) is the other Line (or Mains) power. You Know what to do.

Plug the connector back into the K40 power supply. We'll dress out the wires later.

OK, Line (or Mains) power connected. Nice work.

THAT was the hard part. It's easy from here.

Next up we have the infamous (to K40 modders) FFC (Flat Flexible Cable). This looks like a piece of heavy white tape with printing one side and contacts on the ends, Make sure the side with the contacts faces into the center of the ACR board (toward the silver cylinder on the board) and , grasping the cable close to the end, insert it into the connector marked "FFC Cable". Rocking it slightly side to side will help it seat completely. Double check that it is seated completely by checking the Sharpie line we drew during the M2nano removal.

Next we have a new power cable that runs from your ACR board to the K40 PSU. This has 4 wires in it, but I some kits, 2 will be enclosed in heatshrink tubing at the K40 PSU end. These 2 wires normally carry power from the K40 PSU to the M2nano. We no longer will be using them because the power supply and ACR board work together to supply all power but the High Voltage to fire the Laser tube. This will take some load off the K40 PSU, causing it to run cooler and possibly do a better job at firing the Laser. More on the unused wires later.

Remove the old Power supply cable from the rightmost connector of the K40 PSU, if you have not already. In it's place connect the new cable (red wire to the right) Pay attention to the markings regarding which end and how the connector faces. This is critical, if connected backwards, it can damage the ACR board Logic circuits. Connect the opposite end to the large 4 pin connector on the corner of the ACR board, also confirming the orientation and making sure it's marked "ACR End"

From here you may have some differences, depending on your laser. Follow the instructions as closely as possible, and plug in all the appropriate connectors. If it came out of the M2nano, it has a place here. If you have any doubt as to the correct location for a connector, get in touch with customer service. We'll help you sort out anything you don't understand. Customer service is PART of our products.

On MOST K40 lasers, proceed as follows:

Next connect the connector you marked "Y" in the socket on the ACR board marked "Y Motor" - this is located next to the PSU cable connector.

In MOST K40 installations, that is all there the wiring to do. If you have an "X Motor" connector , or and Endstop (end detects) connector, plug it in, and so on.

Before you clean up, check the switch on the ACR board and make sure it's set to "AUX PWR".
The ACR board can do many things, one is use the K40 power to run your aftermarket controller. While using an auxiliary power supply is best, there are some cases where people are on a budget and are using a power efficient controller that can save some money by using the K40's 5v and 24v outputs.

This is the reason for the switch, and the extra wires in the Power supply cable. Since we are powering the new controller with a new power supply, we don't need the power conductors in the 4 wire cable. The red wire, however, carries the command to fire the laser from the ACR to the K40 PSU. The black wire is the ground. We've supplied a universal cable, if you ever wish to power your controller using the K40 PSU, you can simply remove the insulation from the 2 wires (yellow & Blue), slide the already installed pins into the connector body (see schematic diagram) then flip the ACR switch to "K40 PWR", and you'll be there.

Start-up Preparation

See the Software/Firmware sections at the rear of the manual.

This material changes very frequently so we've made it "replaceable" in anticipation of major changes.
There are also several 'packages' of software and operating systems that can be used with any given controller.
There are so many possibilities, we will only 'get you started', then you'll have to work with your chosen software's support network.
ALL-TEK will help you as much as we can, but we are not software experts.
Return here when your software is loaded and ready to go.

We're going to assume you figured out your software and are 'talking' to your Smoothieboard (or other Smoothieware compatible aftermarket controller)

The changes made here are specific to Smoothieware firmware, and will not work with other systems. If you are using another system and need assistance, we recommend checking the support website before attempting this configuration.

MOST users of the ACR-SBx will be using Smoothieware and Laserweb3. This section assumes this is the case. Both Smoothieware and Laserweb3 are evolving at a rapid pace, and frequent updates are issued. Be warned that these updates themselves can cause issues (it happens with Microsoft Windows, why should opensource guys be any different?) Always back up your existing working version before downloading and executing any updated versions. If the new version does not work, you can reload the previously working version and continue to operate until such time as the new version is debugged.

The "standard" system is as follows:
Modern PC with >Windows 7, Smoothieware (current), Laserweb3 (current), K40 Blue 40W Laser Cutter with Stock electronics Except an ALL-TEK ACR board interfacing to a Smoothieboard >4x.
USB connectivity to Smoothieboard. (Laserweb3 does NOT support Ethernet as of 081316) ALL-TEK recommends utilizing Ethernet connectivity as soon as support for it is available)

Use a high quality USB cable with ferrite beads on both ends, with both Braid & Foil shielding. Gold plating does NOT indicate internal quality of the USB cable. Gold plated cheaply made cables are common. Transparent insulation indicates that the manufacturer WANTS you to see what is in their cables. (that's why hospital grade wiring devices are clear) Black and gold looks cool, but that's all. Black insulation hides cheap construction. Keep your cable as short as possible, and use a minimum of USB cables to other peripherals when using the Laser. (they each form a ground loop and pick up noise)

A bulkhead cable extension (USB or Ethernet) to bring the controllers input to the outside of the K40 case is recommended.
This makes the frequent connections/disconnections easier, prevents wear to your controllers connector, and keeps your hands out of the live electrical box.
(ALL-TEK has 'no cut' K40 kits for USB & Ethernet)

READY??

THE START UP – FOR REAL:

Settings:
K40: Water pump running, Flow confirmed, Power set to min, Laser enable OFF, all doors closed EXCEPT the electrical door (tape it up so it cannot fall), position the cutting head roughly centered in work area.

Double Check: ACR switch in AUX, is your SD card properly seated in the Smoothieboard?, are all connectors secure in right places. Listen to your 'little voice' if it's telling you somethings not right, odds are good it's not. Your 'little voice' is usually right.

If in doubt call ALL-TEK, we don't mind REALLY. 315-685-3326
Last Chance...

VVVVVVVVVVVVVVVVVVV TIME TO GO HOT VVVVVVVVVVVVVVVVVVVVV

If, at any time, things are not proceeding EXACTLY as described, you hear or smell something that's not right, or your little voice chimes in, Immediately shut down the power and unplug the USB cable. Speed counts here.

The start-up: Keep your K40 switched OFF until told to power it on.

OK here we go... Plug your USB cable into the Smoothieboard.
Keep your hand right there until we're sure all is well...
Your computer will power the Smoothieboard until the Aux power is turned on.

The Smoothieboard will boot and load the currently stored CONFIG file.
(LEDs 3 & 4 slow flash and then speed up)
You should have:

LED6 GRN <ON>
LED5 GRN <Flash>
LED4 GRN <Flash> (SD Card status)
LED3 GRN <ON> (5.0V)

LED2 ORG <ON> (3.3V) Created by the SB from +5V (USB or Aux)
LED1 RED <OFF> (VBB) 24V Motor Power from Aux Supply

Give it time to go through it's sequence and settle down to a nice steady fast flash of LEDs 3 and 4

There's several ways to proceed from here. Rather than test everything step by step, I recommend going ahead and firing up Laserweb3 and putting the module through it's paces. Normally I'd be a little more cautious and go step by step, but given your Smoothieboards pedigree, it's already run a K40, burned a Bat (more on the Bat later), and knows it's way into your computer.

If you DO wish to proceed with extreme caution, Install Pronterface (if you haven't already) and go here:http://smoothieware.org/debug:start
Follow the step by tests, and return here when done.

To fire up Laserweb3 and see if it works, stay right here.

I'm going to assume you've already been to the 'back of the book' and to the Laserweb3 Wiki in preparation for this step. If not, Safely eject the Smoothieboard, unplug and take care of those steps. When it's done, come back here.